Lead Battery Manufacturing

Engineering Controls

The following engineering controls are effective means of lowering both in-plant lead exposure and lead emissions to the outside environment:

- Local Exhaust Ventilation Diagrams
- Laminar Flow (Supplied Air) Islands
- Central Vacuum System
- Flow charts
  - Battery Manufacturing Process Flow Chart, Wet (Jar) Formation
  - Battery Manufacturing Process Flow Chart, Dry Charge (Tank) Formation
  - Battery Manufacturing Process Flow Chart, Concast/Wet (Jar) Formation
  - Battery Manufacturing Process Flow Chart, Expanded Metal/Wet (Jar) Formation

View larger image of a supplied air island

Safety and Health Topics Page
Oxide and Grid Processing
Plate Processing
Battery Assembly
Battery Repair and Reclaim
Environmental Controls
Maintenance
Engineering Controls
Local Exhaust Ventilation Diagrams
Laminar Flow (Supplied Air) Islands
Central Vacuum System
OSHA Lead Requirements...
Source Identification Protocol

Lead Battery Manufacturing

Engineering Controls > Local Exhaust Ventilation Diagrams

Oxide Production

- Gas fired lead pot, canopy hood
- Oxide drum filling, local exhaust ventilation
- Oxide barrel filling, local exhaust ventilation

Oxide Conveyance and Classification

- Conveyor Belt Ventilation Diagram
- Belt Conveying Head Pulley Diagram
- Conveyor Belt Loading Diagram
- Screw Conveyor Components
- Drag link Conveyor Configuration Diagram #1
- Drag link Conveyor Configuration Diagram #2

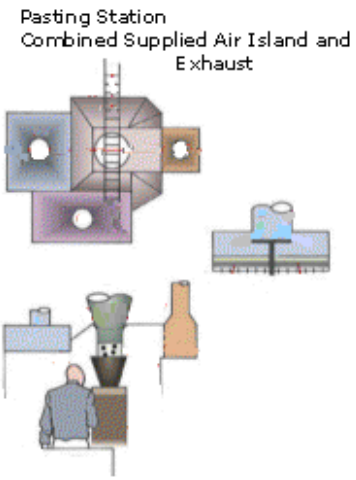

View larger image of pasting station, supplied air island diagram

Paste Mixing

- Paste mixing testing station
- Paste mixer, dual mixer emission controls, Part A
- Paste mixer, dual mixer emission controls, Part B

Grid Production and Parts Casting

- Lead pot and dross hood Part A
- Lead pot and dross hood Part B
- Ventilated torch

Pasting

- Scrap handling, barrel/drum exhaust hood
- Pasting station, supplied air island
- Integrated controls, plate take-off
- Integrated controls, plate take-off Part A
- Integrated controls, plate take-off Part B
- Integrated controls, plate take-off Part C
- Integrated controls, plate take-off Part D
- Plate storage rack hood
- Pasting take-off, work station hood
- Test station ventilation

Parting

- Parting Station, Band Saw Ventilation
- Scrap handling, barrel/drum exhaust hood

Safety and Health Topics Page
Oxide and Grid Processing
Plate Processing
Battery Assembly
Battery Repair and Reclaim
Environmental Controls
Maintenance
Engineering Controls
Local Exhaust Ventilation Diagrams
Laminar Flow (Supplied Air) Islands
Central Vacuum System
OSHA Lead Requirements...
Source Identification Protocol

Enveloping and Wrapping

- Plate wrapping station
- Scrap handling, barrel/drum exhaust hood

Stacking

- Stacking table, single exhaust booth hood
- Stacking, slant stacking station (industrial)
- Plate storage rack hood
- Scrap handling, barrel/drum exhaust hood

Group Burning

- Stacking table, single exhaust booth hood
- Cast on strap (Farmer), total enclosure w/ exhaust
- Cast on strap (Dynacast II), emission controls
- Scrap handling, barrel/drum exhaust hood
- Group drop, tamping/burner hood
- Stack and burn, bench hood
- Tiegal machine, enclosure assembly
- Tiegal anchor, sinking machine
- Post burning, portable tool exhaust

Intercell Welding and Post Burning

- Post burning, portable tool exhaust
- Post tacking, portable hood
- Post/intercell burning, backdraft hood

Formation

- Post burning, portable tool exhaust

Reclaim

- Scrap handling, re-melt pot plus slag/dross/skim hood

Baghouse

- Dry Type Dust Collectors Dust Disposal
- Dry Type Dust Collectors Discharge Valves 1
- Dry Type Dust Collectors Discharge Valves 2

Maintenance

- Moveable Exhaust Hood Diagram
- Work Bench Diagram
- Typical System Low Volume/High Velocity Diagram
- Hood for Cup Type Surface Grinder and Wire Brushes
- Supplied Air Island Diagram
- Post Burning Exhaust Diagram

Supplied Air Island

- Supplied Air Island Diagram
- Pasting station, supplied air island

Central Vacuum System

- Central Vacuum System Diagram
- Plan view of central vacuum system
- Elevation view of central vacuum system
- Schematic view of central vacuum system

Personal Protective Equipment

- Boot Wash Station Diagram
- Shoe Cleaning Machine
- Clothes Cleaning Air Shower Diagram

Housekeeping

- Central Vacuum Diagram
- Vacuum Truck Diagram

Hygiene Facility

- Hygiene facility diagram
- Clothes Cleaning Air Shower Diagram

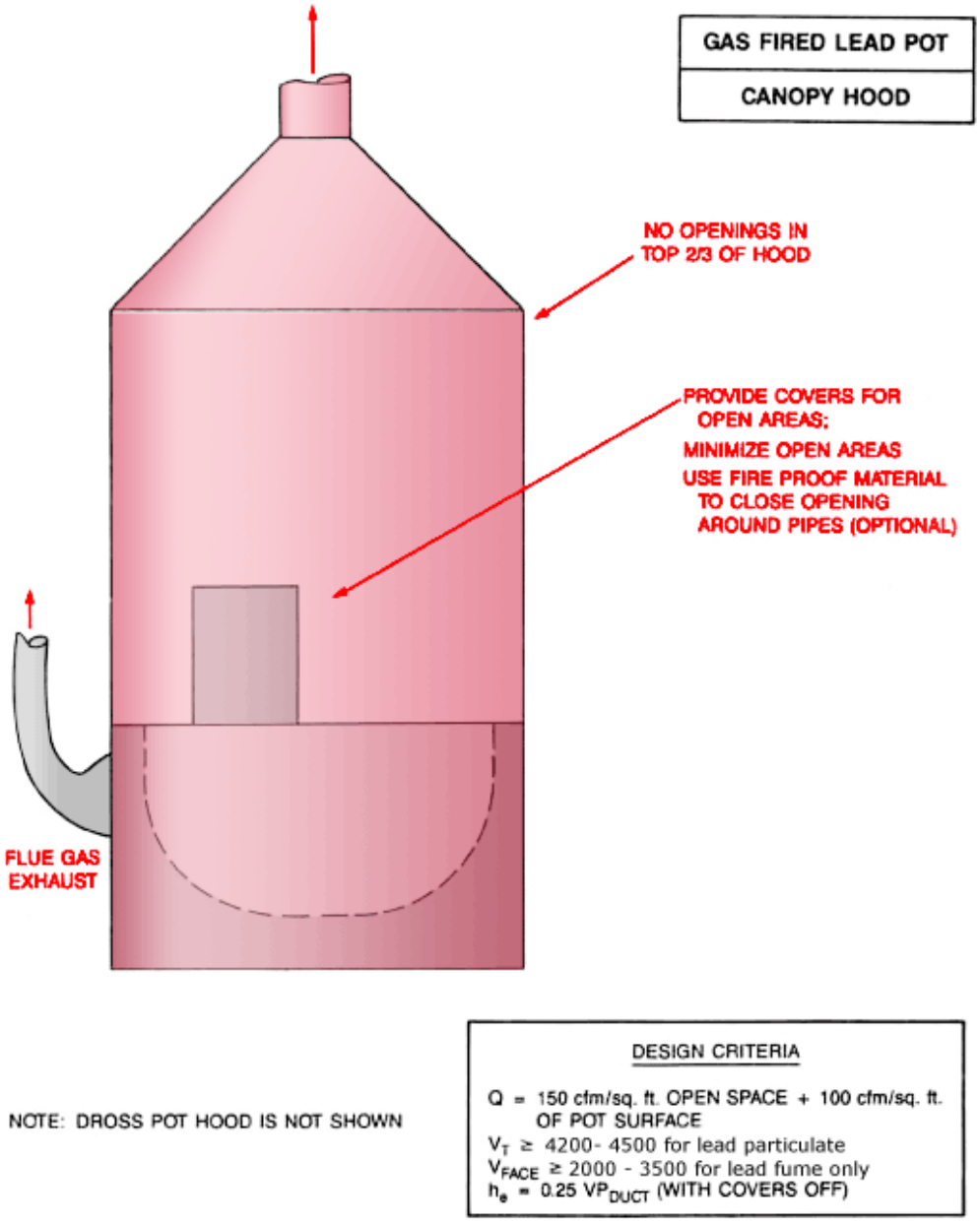

Image of gas fired lead pot, canopy hood

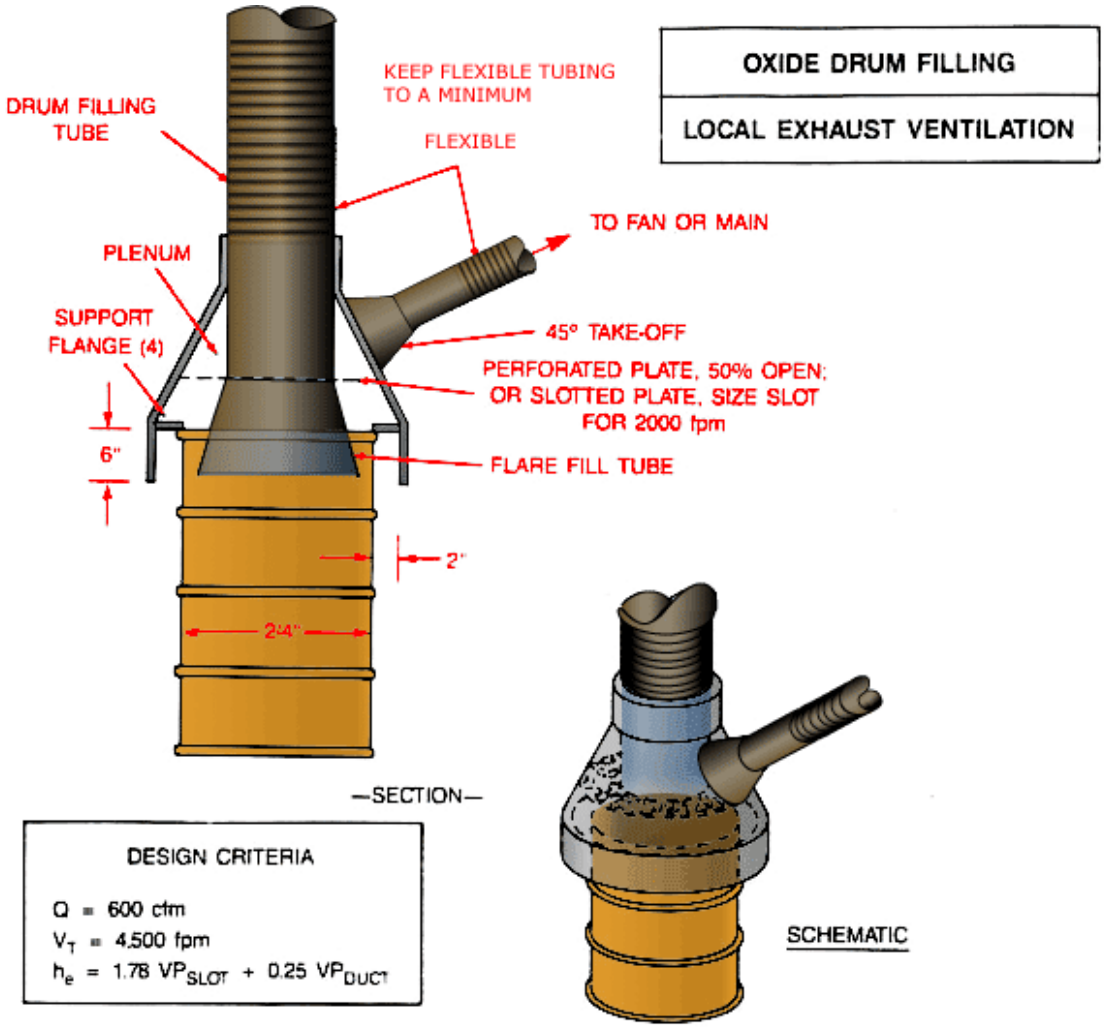

Image of oxide drum filling, local exhaust ventilation

Dross and Skimmings Storage Ventilation

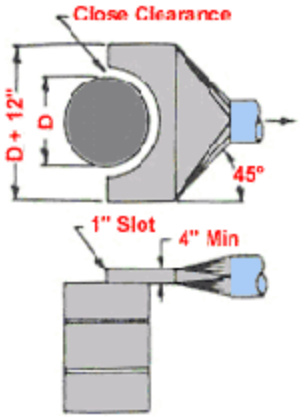

- Q = 100 cfm/sq ft barrel top min
- Duct velocity = 4200 to 4500 fpm
- Entry loss = 0.25 vp + 1.78 slot vp
- Manual loading

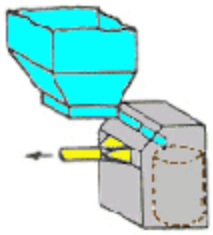

- Q = 150 cfm/sq ft open face area
- Duct velocity = 4200 to 4500 fpm
- Entry loss = 0.25 vp for 45° taper

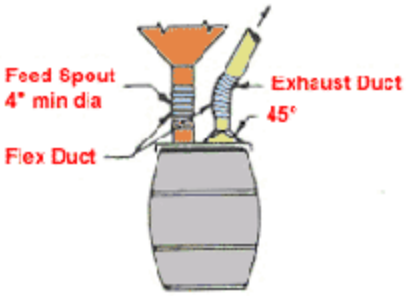

- Q = 50 cfm x drum dia (ft) for weighted lid
  150 cfm x drum dia (ft) for loose lid
- Duct velocity = 4200 to 4500 fpm
- Entry loss = 0.25 vp

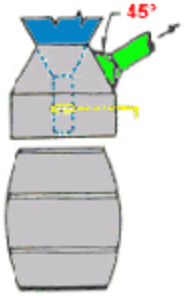

- Q = 300 - 400 cfm
- Duct Velocity = 4200 to 4500 fpm
- Entry loss = 0.25 vp

Image of oxide barrel filling, local exhaust ventilation

Conveyor Belt Ventilation

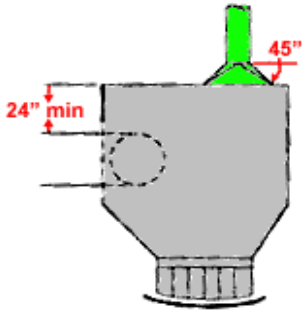

Conveyor transfer less than 3' fall. For greater fall, provide additional exhaust at lower belt. See 3 below.
h_e =0.25 VP_d

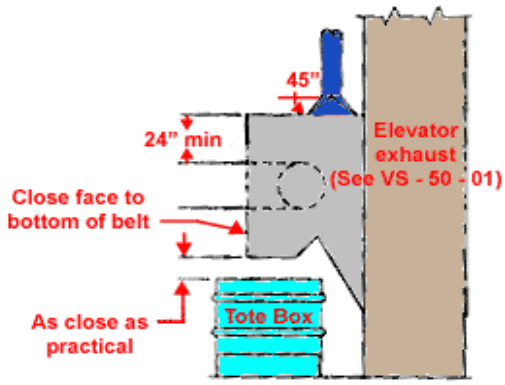

2. Conveyor to elevator with magnetic separator
h_e = 0.25 VP_d

DESIGN DATA

Transfer points:
Enclose to provide 150 - 200 fpm indraft at all openings. (Underground mining tunnel ventilation will interfere with conveyor exhaust systems.)

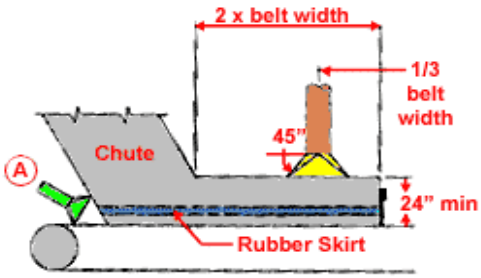

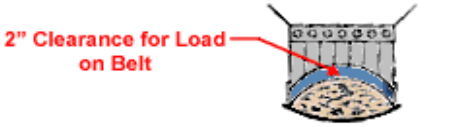

DETAIL OF BELT OPENING

3. Chute to belt transfer and conveyor transfer. greater than 3' fall.
Use additional exhaust at A
for dusty material as follows:
Belt width 12"-36". Q=700 cfm
Belt width above 36". Q=1000 cfm
h_e = 0.25 VP_d

Note: Dry, very dusty materials may require exhaust flowrates 1.5 to 2.0 times stated values

Q = 350 cfm/ft belt width for belt speeds under 200 fpm. (minimum)
= 500 cfm/ft belt width for belt speeds over 200 fpm and for magnetic separators. (minimum)
Duct velocity = 4200 -4500 fpm
h_e = 0.25 V_P

Conveyor belts:
Cover belt between transfer points
Exahaust at tranfer points
Exhaust additional 350 cfm/ft. of belt width at 30' intervals. Use 45 tapered connections.

American Conference of Governmental Industrial Hygienists	Date: 1 - 91
	Figure: VS - 50 - 20

From American Conference of Governmental Industrial Hygienists (ACGIH®), Figure VS-50-20, *Industrial Ventilation : A Manual of Recommended Practice*, 23rd Edition. Copyright 1998. Reprinted with permission.

Image of conveyor belt ventilation diagram

Toxic Material Belt Conveying Head Pulley

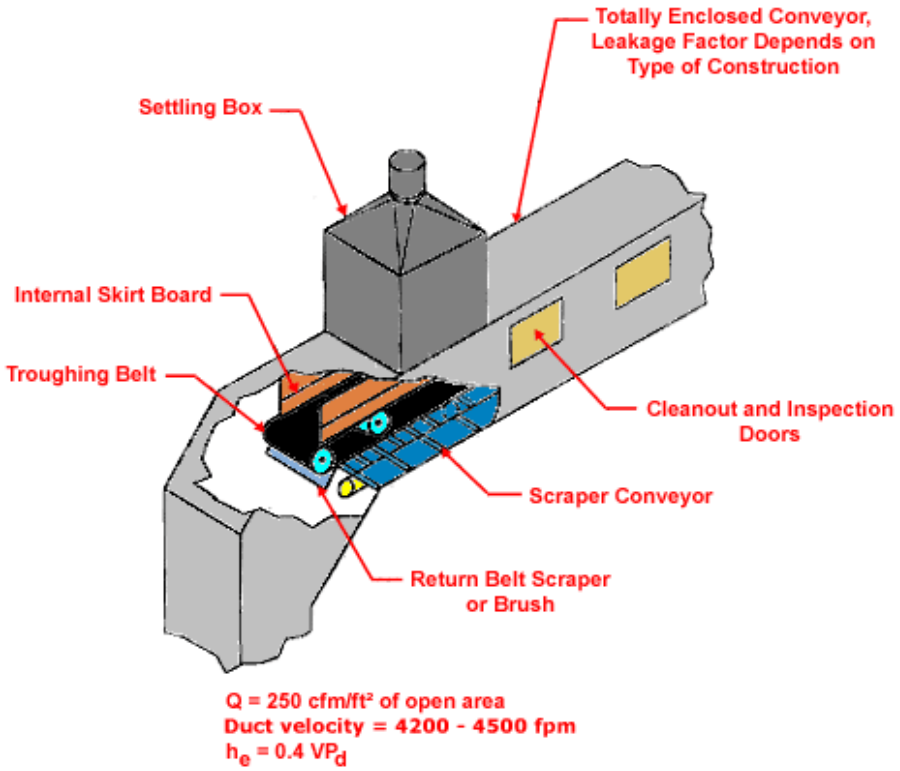

American Conference of Governmental Industrial Hygienists	Date: 1 - 91
	Figure: VS - 50 - 21

From American Conference of Governmental Industrial Hygienists (ACGIH®), Figure VS-50-21, *Industrial Ventilation : A Manual of Recommended Practice*, 23rd Edition. Copyright 1998. Reprinted with permission.

Image of belt conveying head pulley diagram

Toxic Material
Conveyor Belt Loading

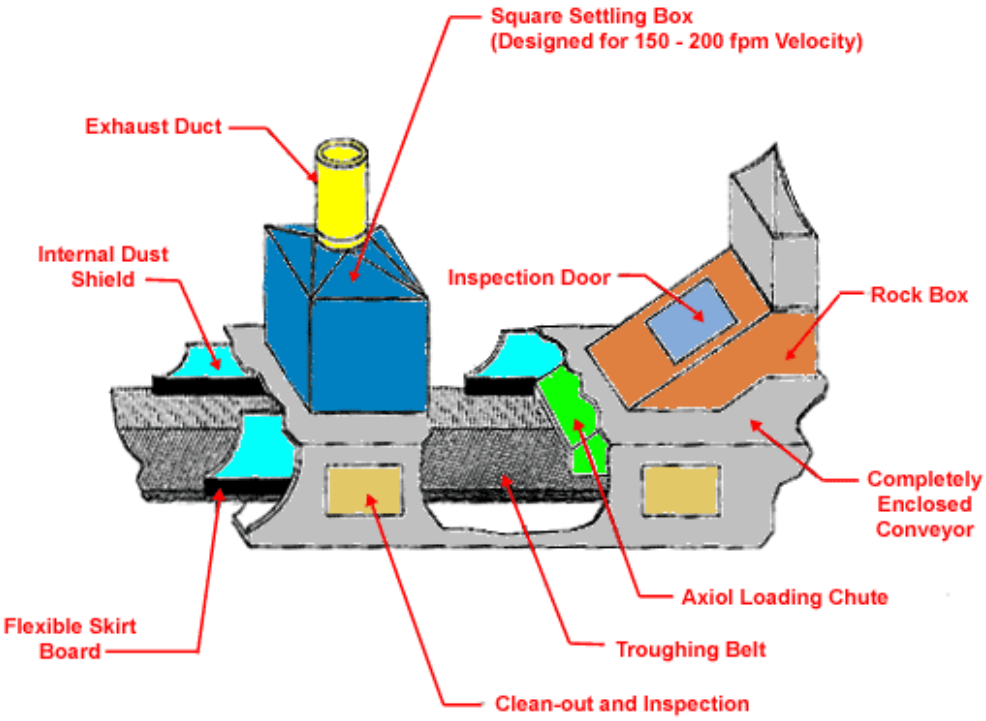

Q = 250 cfm/ft² of open area
Duct velocity - 4200 - 4500 fpm
$h_e = 0.4\ VP_d$

American Conference of Governmental Industrial Hygienists	Date: 1 - 91
	Figure: VS - 50 - 22

From American Conference of Governmental Industrial Hygienists (ACGIH®), Figure VS-50-22, *Industrial Ventilation : A Manual of Recommended Practice*, 23rd Edition. Copyright 1998. Reprinted with permission.

Image of conveyor belt loading diagram

Conveyors -
Screw Conveyor Components

THE CONVEYOR SCREW imparts a smooth positive motion to the material as it rotates within the trough.

COUPLINGS AND SHAFT connect and transmit motion to subsequent screw conveyors. Held in place by self-locking Tem-U-Lac bolts.

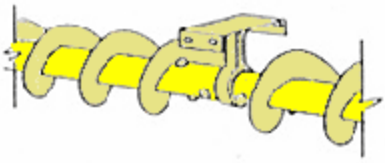

HANGERS provide support, maintain allignment and serve as bearing surfaces.

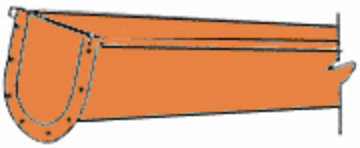

TROUGHS AND CONVEYORS completely enclose the material being conveyed and the rotating parts. Covers are availavle in various types and are secured to the trough by Spring, Screw, Tite Seal or quick acting Barron Clamps depending on the trough being used. Also available as in a tubular configuration withno cover required.

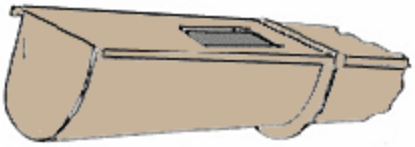

INLET AND DISCHARGE OPENINGS may be located wherever needed, discharge spouts may be without slices or fitted with either flat or curved slides. These slides may be operated by hand, rack and pinion gears, or by power.

Image of screw conveyor components

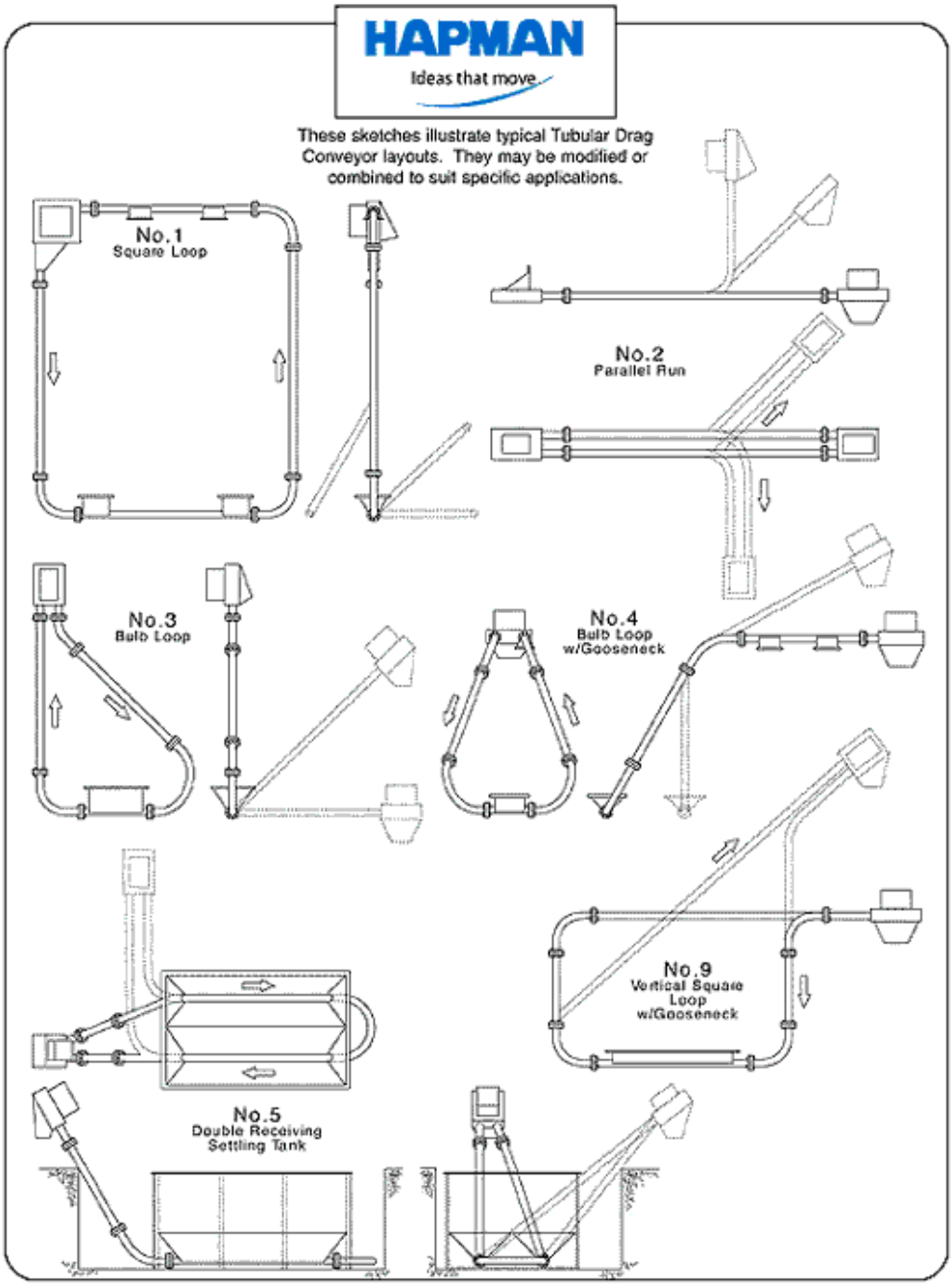

These sketches illustrate typical tubular drag conveyor layouts. They may be modified or combined to suit specific applications

HAPMAN

Ideas that move

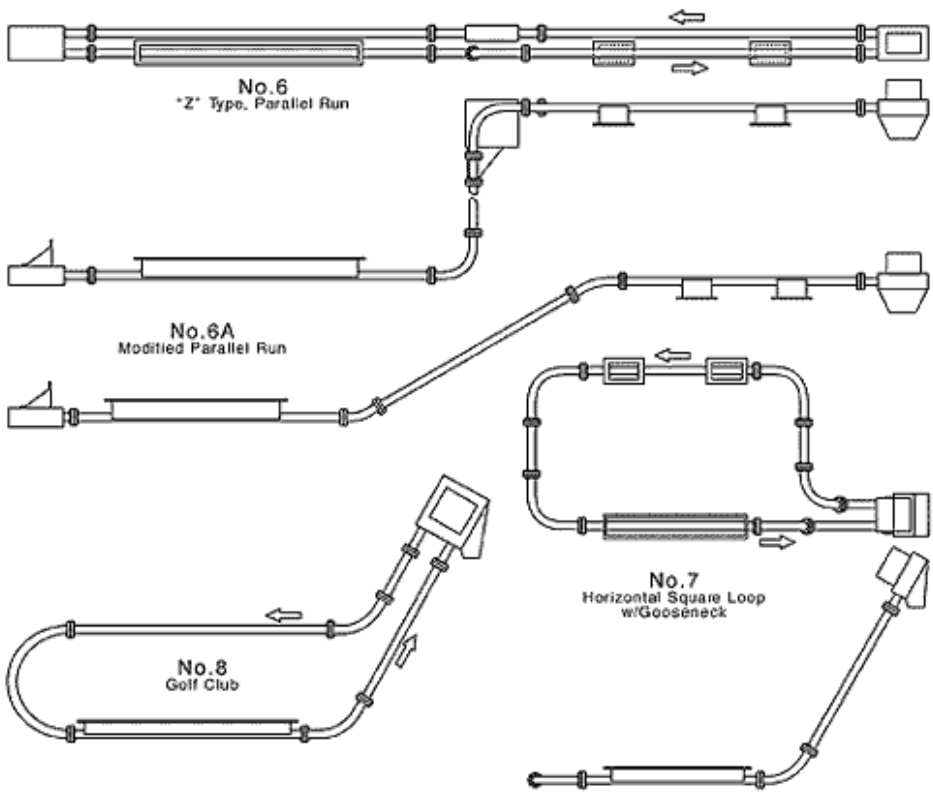

CAPACITY CHART

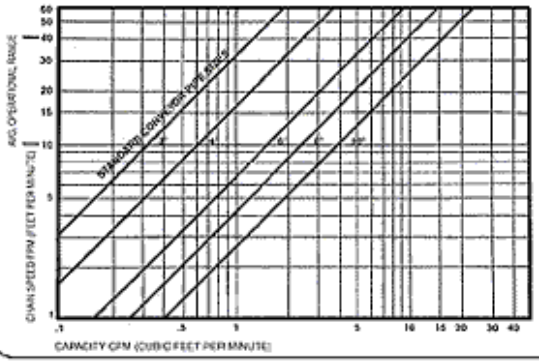

GENERAL DESIGN INFORMATION

STANDARD PIPE SIZES	STANDARD BEND RADII
3'	18"
4"	24"
6"	36"
8"	48"
*10"	60"

Additional receiving and/or discharge hoppers may be specified. Location and details of construction to meet requirements.

* Conveyor circuitry limited.

Hapman
P.O. Box 2321
Kalamazoo, Michigan 49003
269-343-1675 • 800-427-6260 • Fx 269-349-2477
info@hapman.com • www.hapman.com

These sketches illustrate typical tubular drag conveyor layouts. They may be modified or combined to suit specific applications

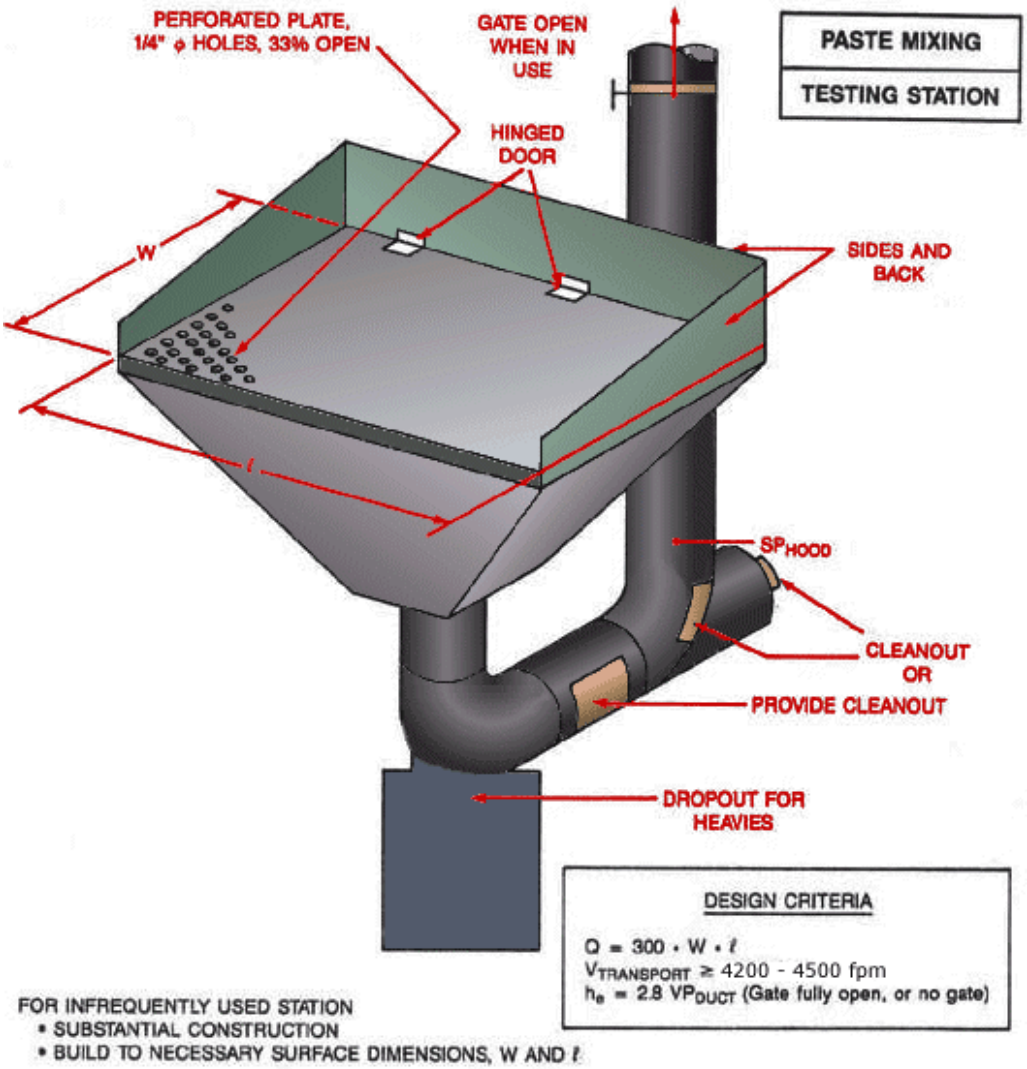

Image of paste mixing, testing station diagram

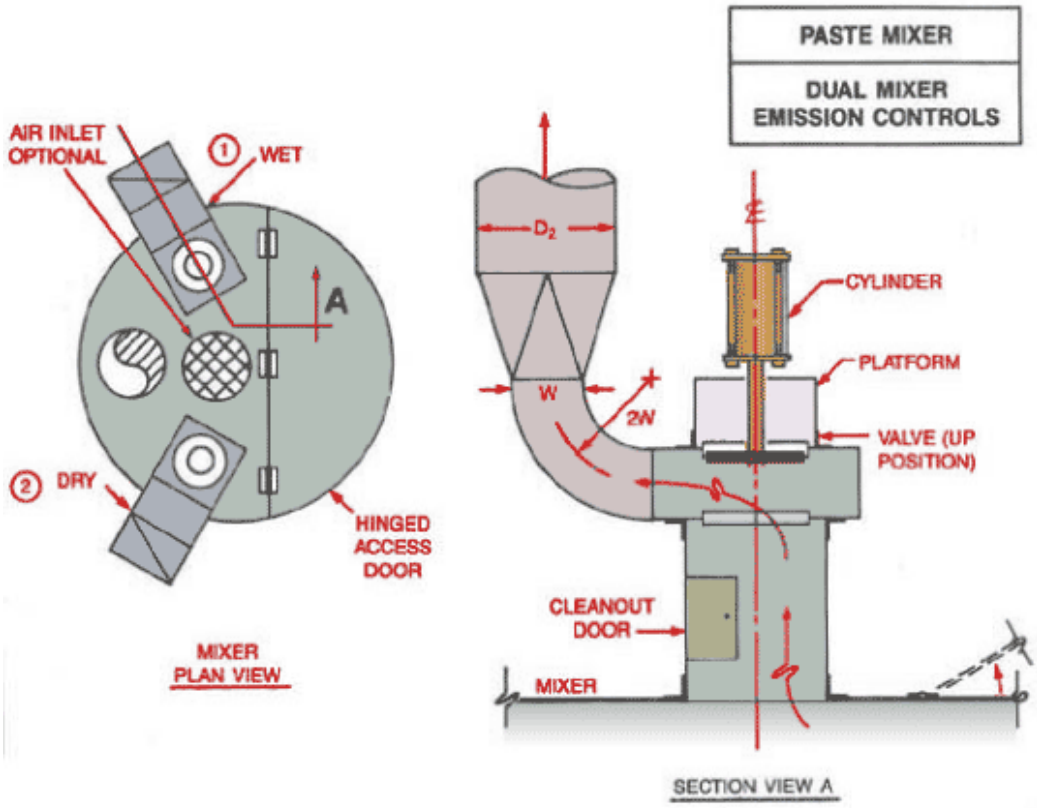

DESIGN CRITERIA

$Q_{MAX.}$ = 400 CFM/SQ. FT. × AREA OF OPEN ACCESS DOOR, SQ. FT.
$V_{TRANSPORT}$ = 4,500 fpm (WHEN ACCESS DOOR OPEN, VALVE IN UP POSITION)
h_e = 1.6 VP_{DUCT} (ACCESS DOOR OPEN, VALVE IN UP POSITION)

NOTE: INSTEAD OF OPENING DOOR FOR AIR INLET ON WET CYCLE, AN OPTIONAL AIR INLET CAN BE INSTALLED.
MANUFACTURERS OF MIXERS SET AIR VOLUME REQUIREMENTS ON MIXER.

Image of paste mixer, dual mixer emission controls, Part A

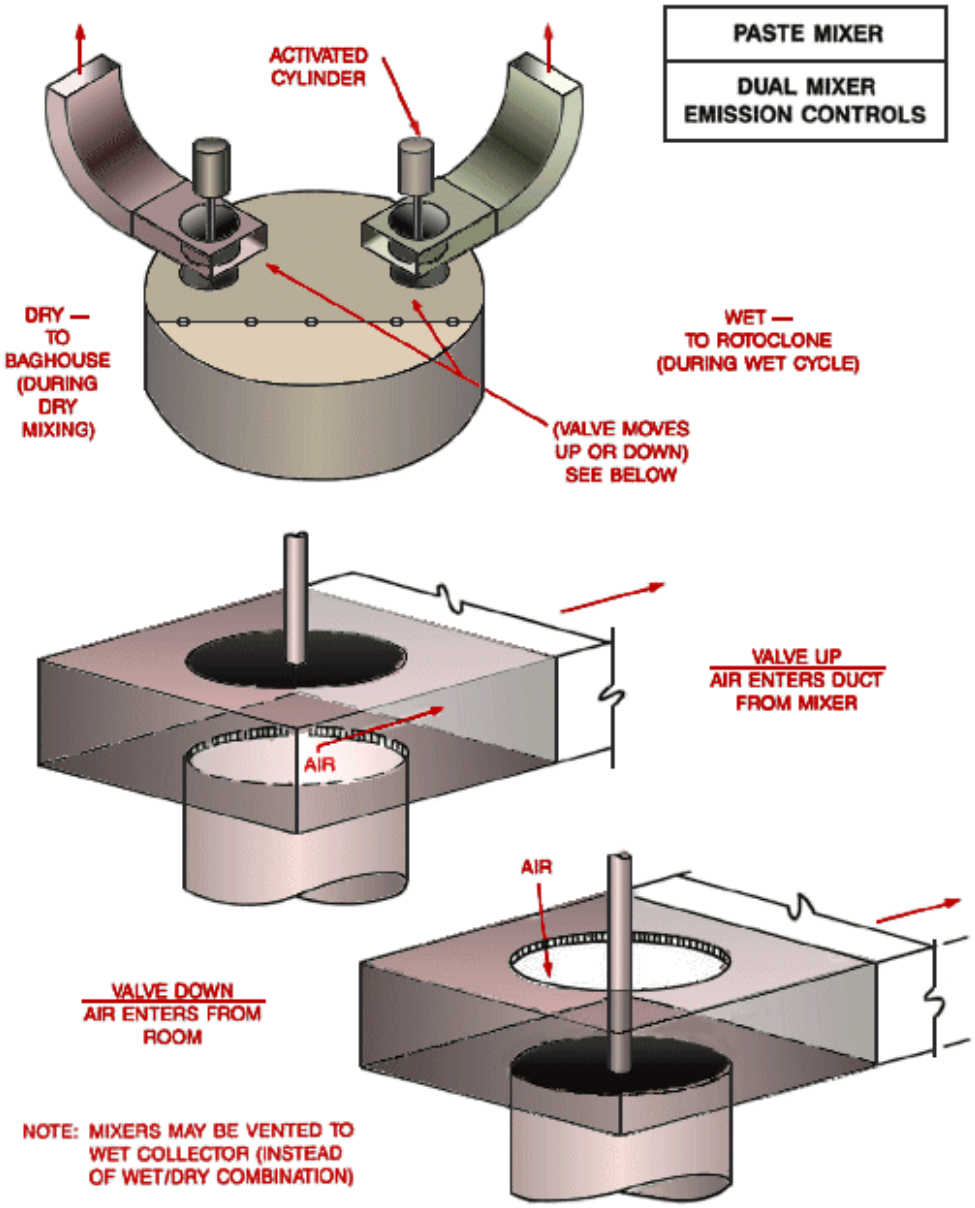

Image of paste mixer, dual mixer emission controls, Part B

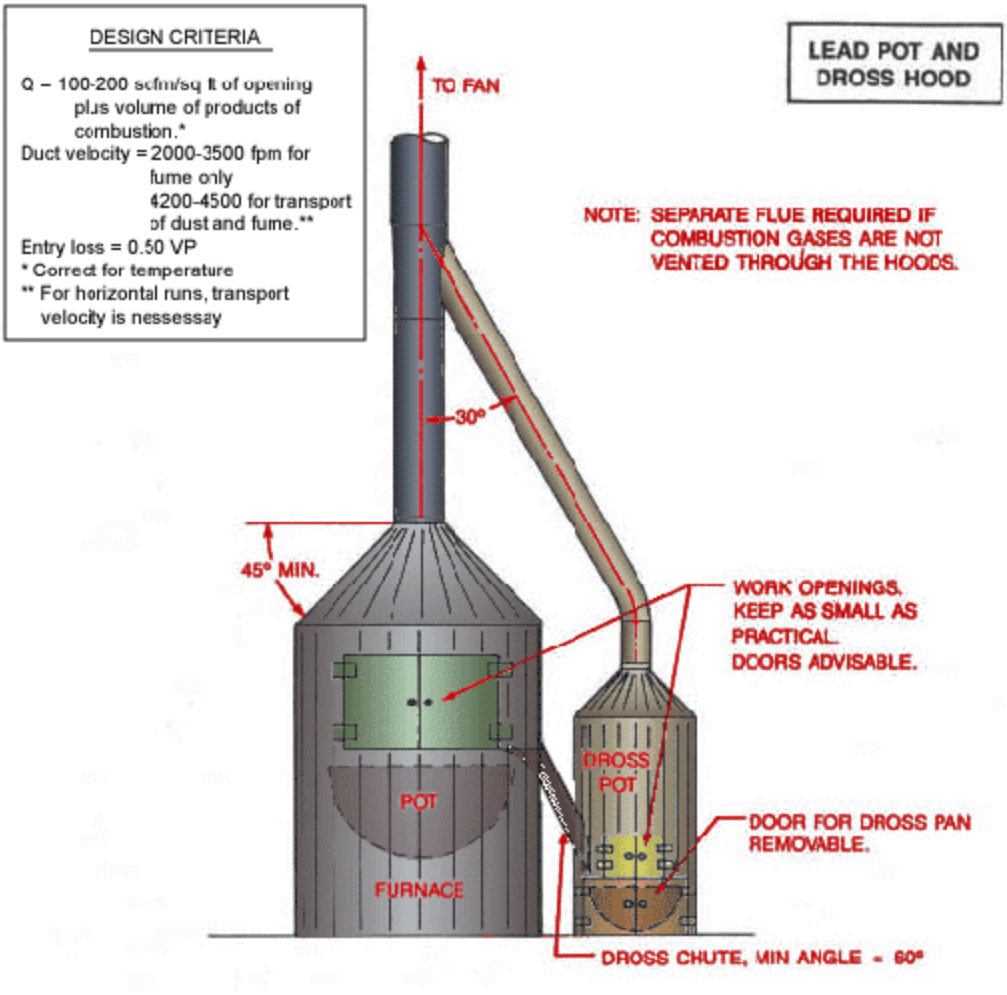

Diagram of lead pot and dross hood

Scrap Handling Remelt Pot and Slag/Dross/Skim Hood

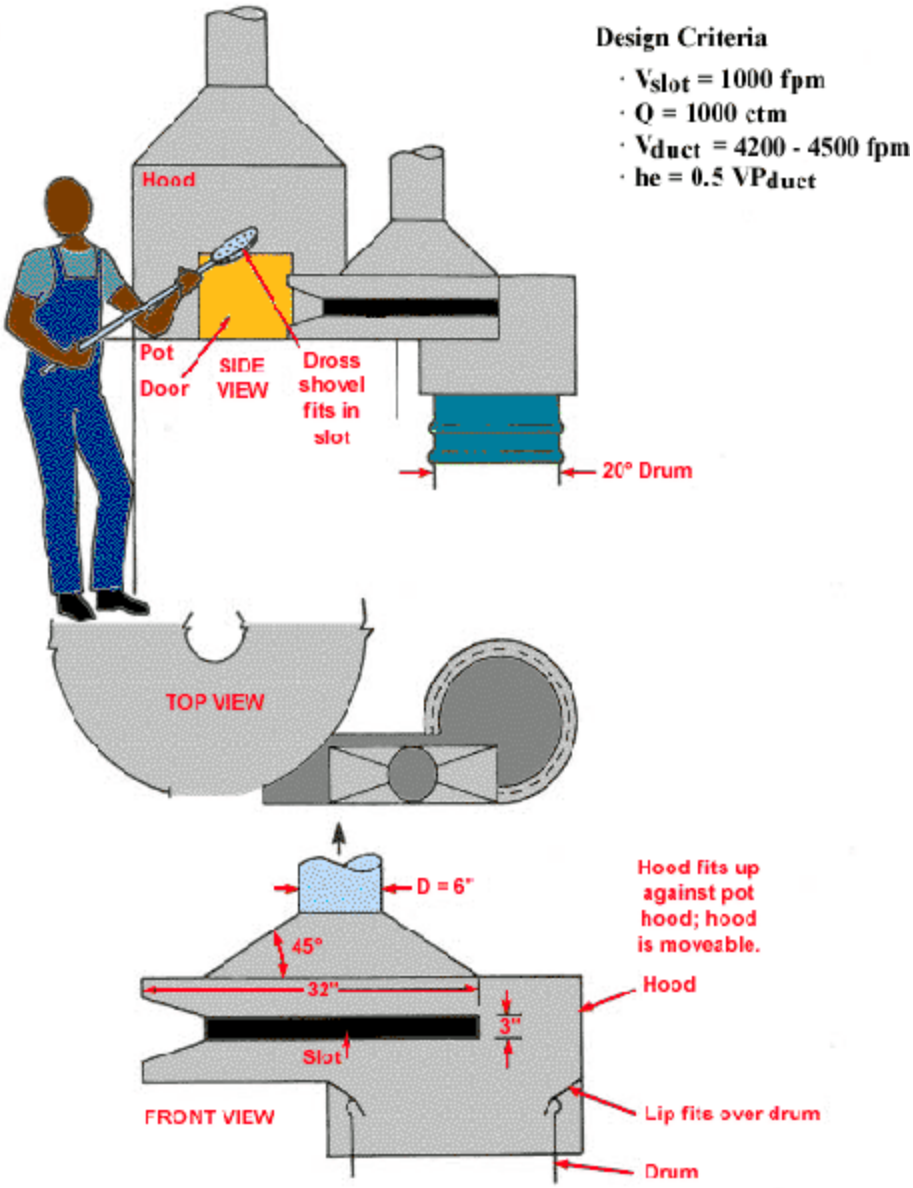

Image of scrap pot and dross hood diagram

Portable Tool Exhaust
(High Velocity/Low Volume)

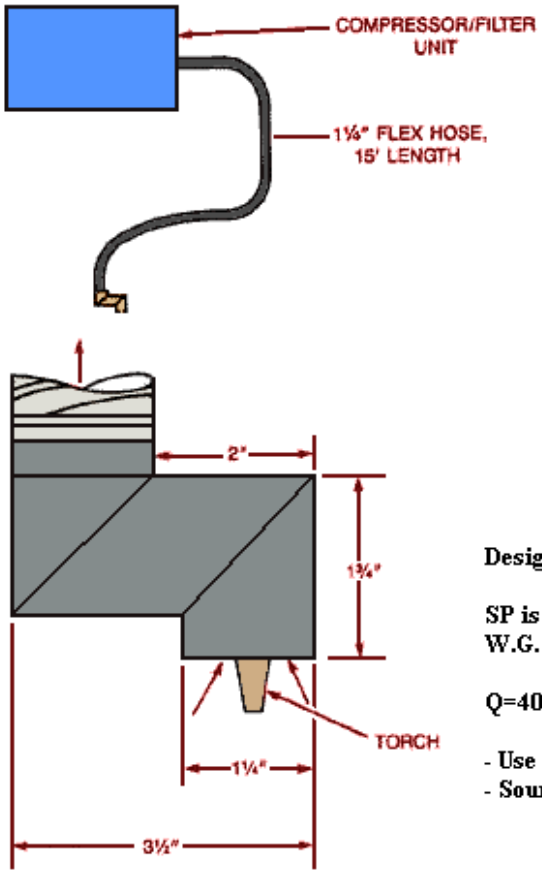

Design Criteria:

SP is greater than or equal to 72" W.G. (inlet)

Q=40 cfm

- Use steel mold
- Source must be within 1" of hood

Image of post burning, portable tool exhaust

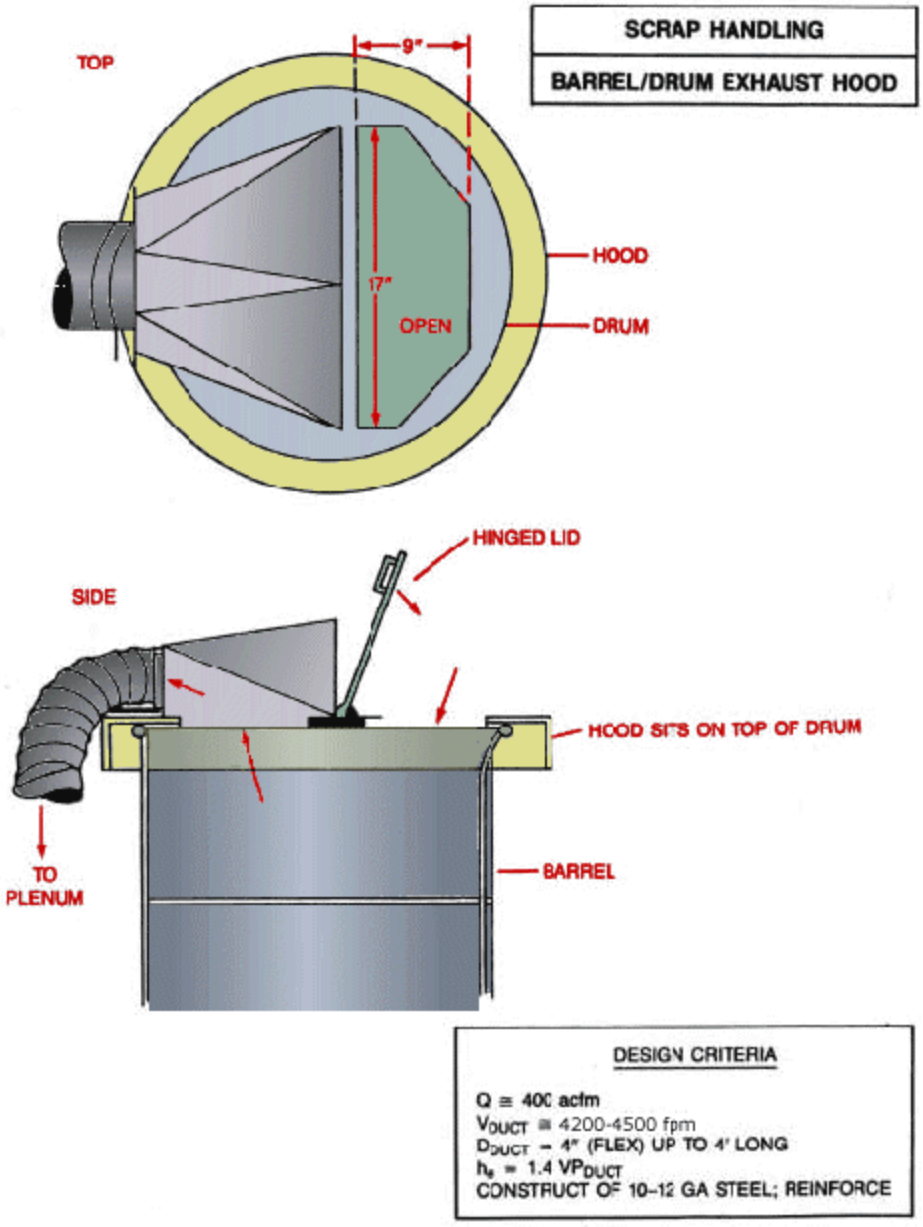

Image of scrap handling, barrel/drum exhaust hood

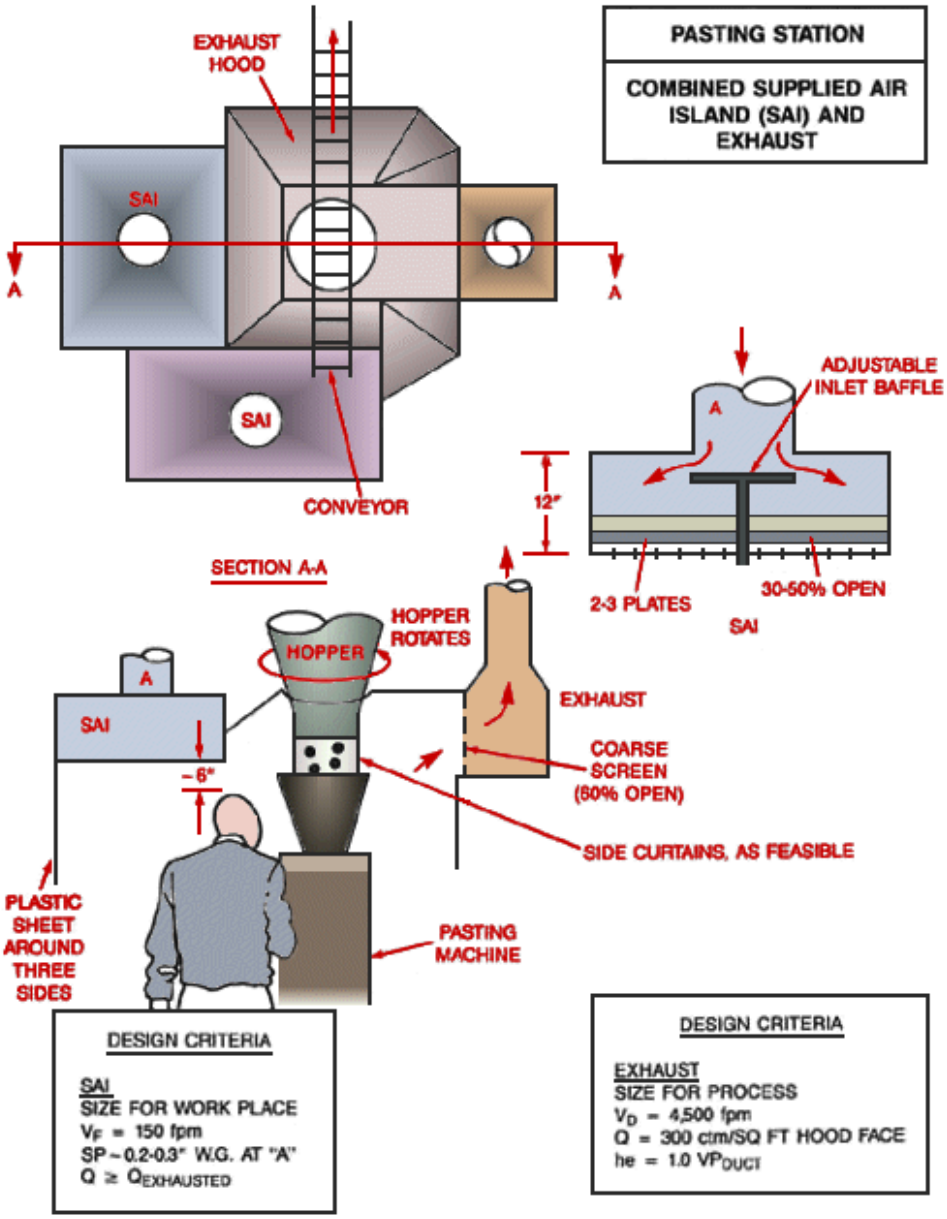

Image of pasting station, combined supplied air and exhaust diagram

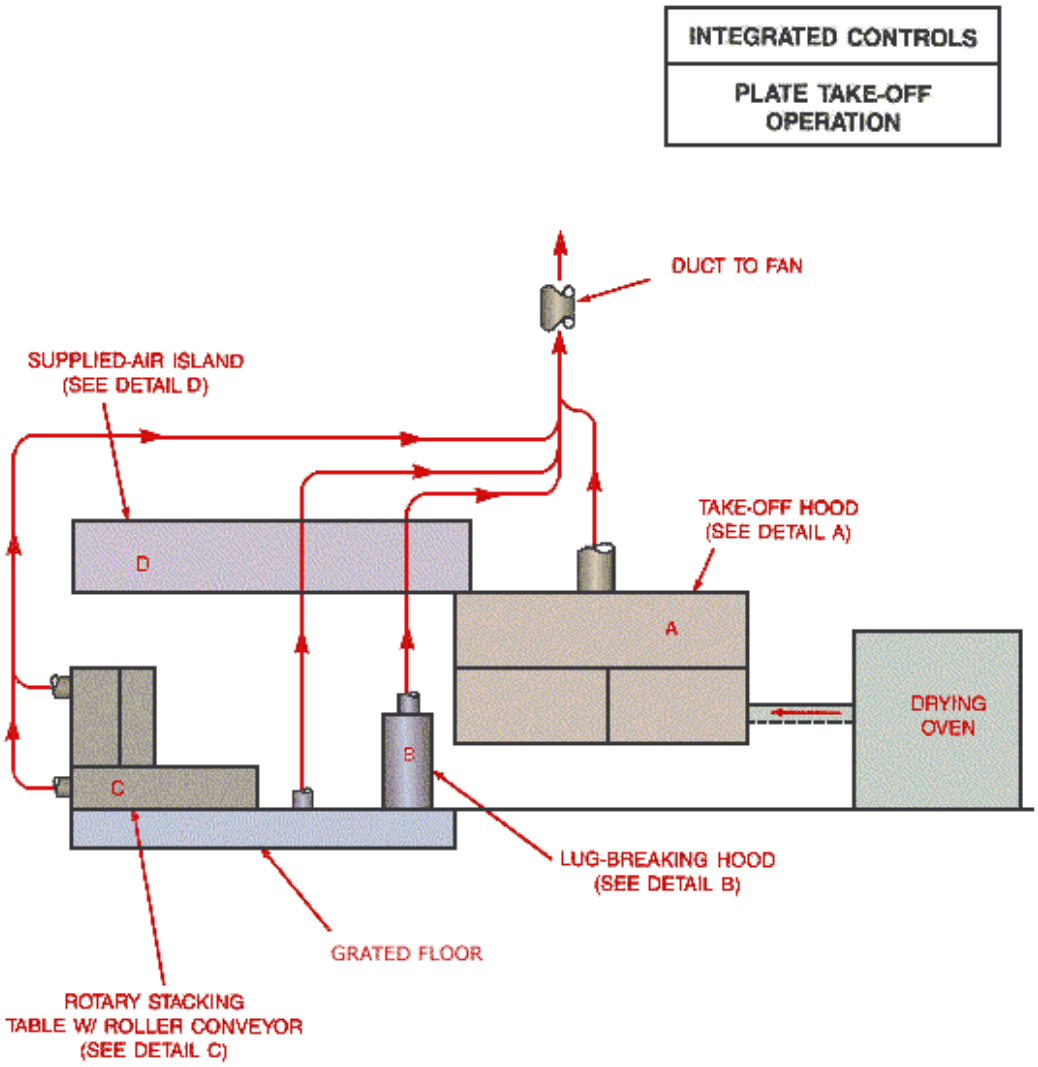

Image of integrated controls, plate take-off operation

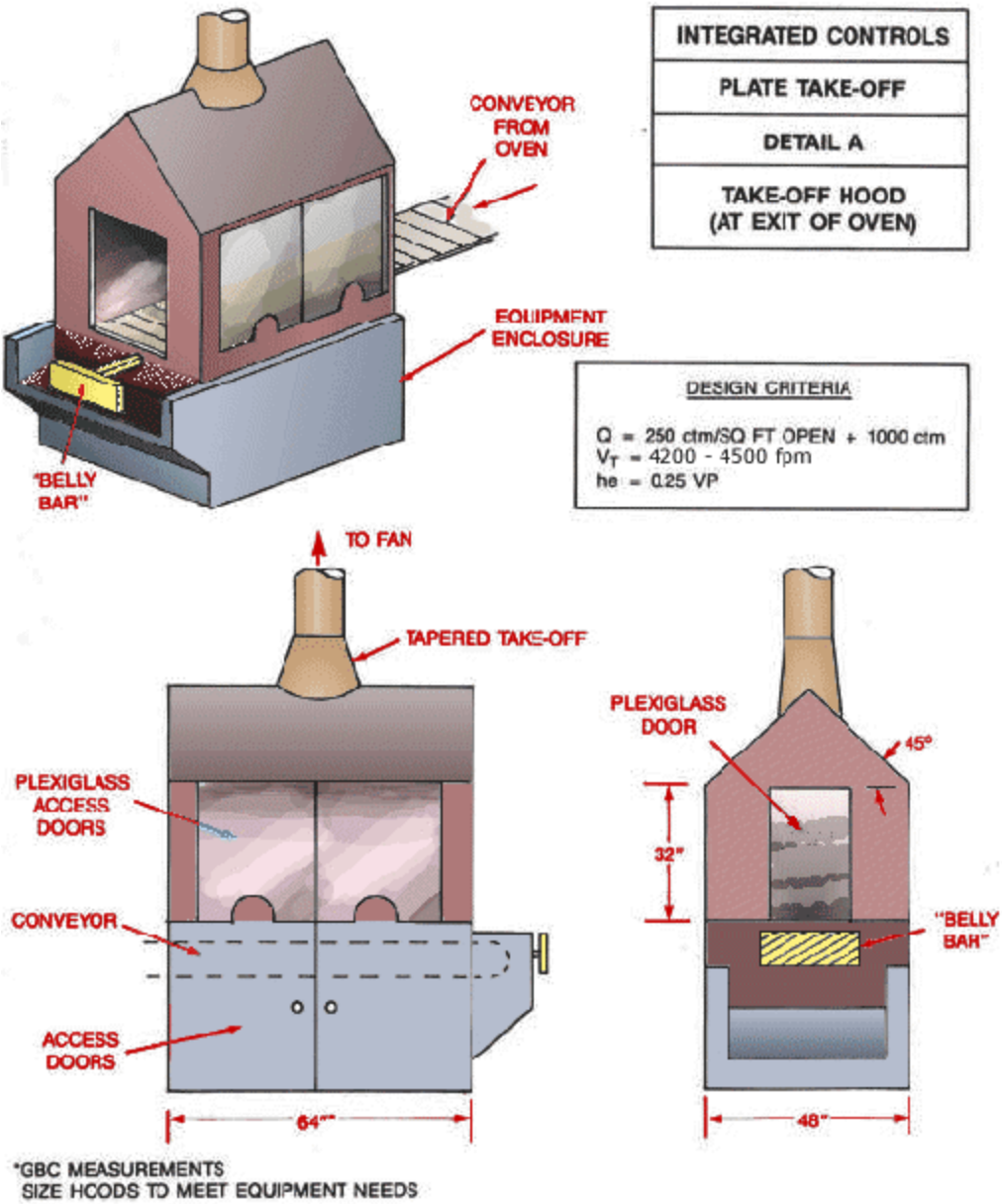

SOURCE: GBC, READING, PA

Image of integrated controls, plate take-off operation, Part A

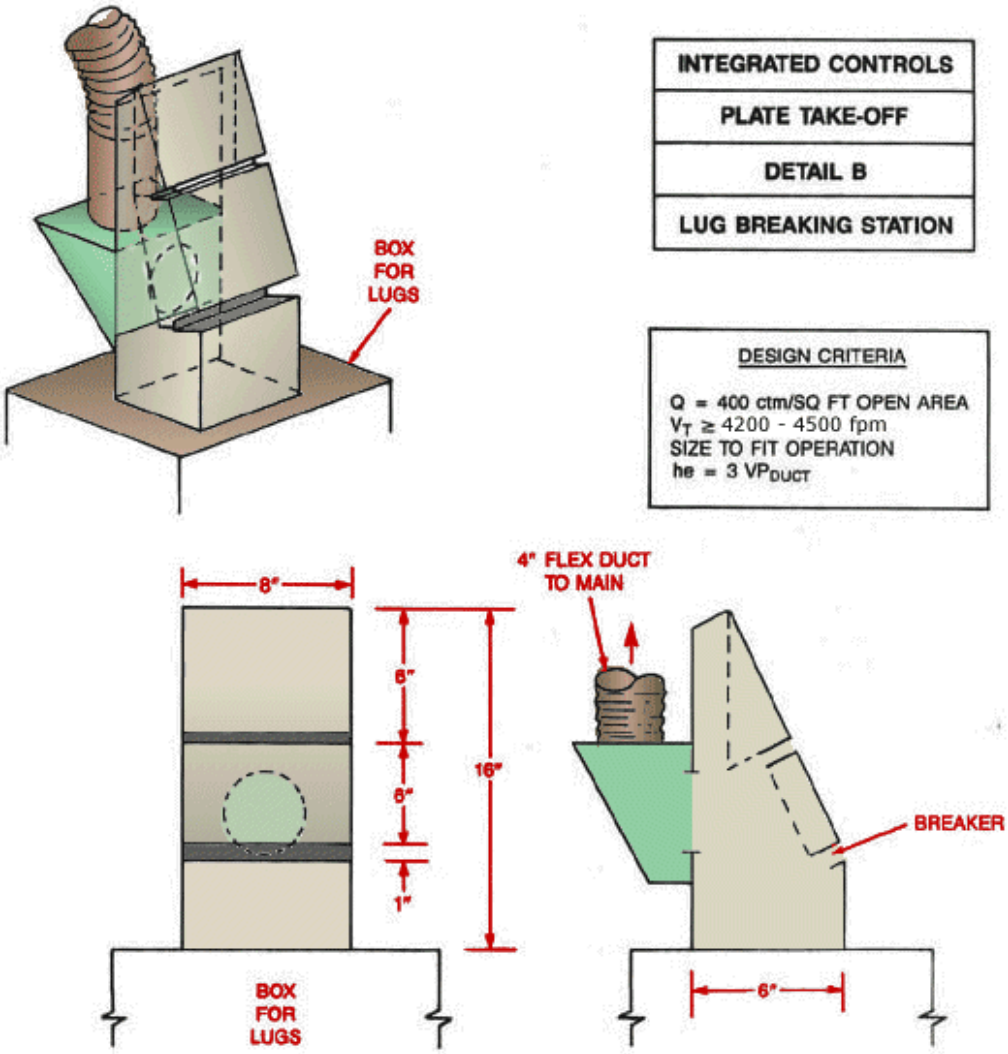

Image of integrated controls, plate take-off operation, Part B

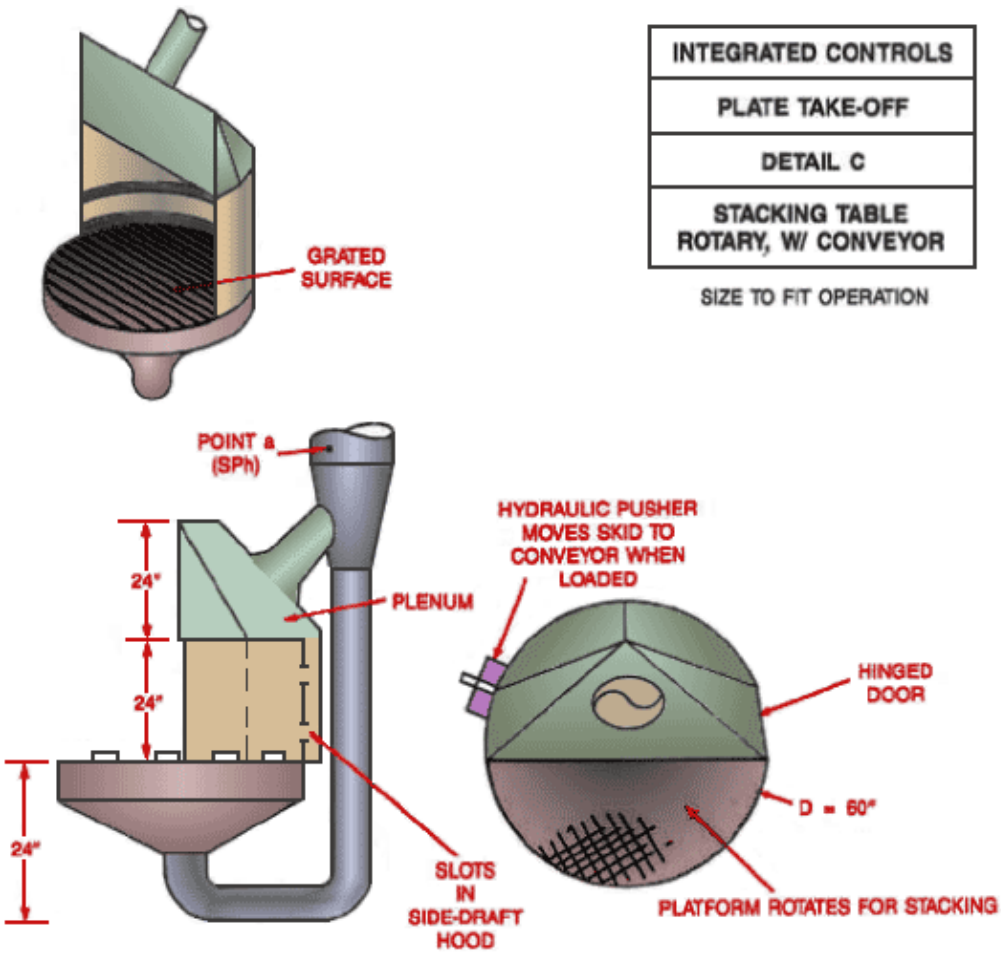

DESIGN CRITERIA

Q = 150 ctm/SQ FT DOWNDRAFT AREA + 150 ctm/SQ FT SIDE HOOD AREA
V_{SLOT} = 2000 fpm
he = NA (USE BLAST GATES TO BALANCE SYSTEM; PROVIDE AT LEAST −5" STATIC PRESSURE AT POINT a)
$V_T \geq$ 4200-4500 fpm

Image of integrated controls, plate take-off operation, Part C

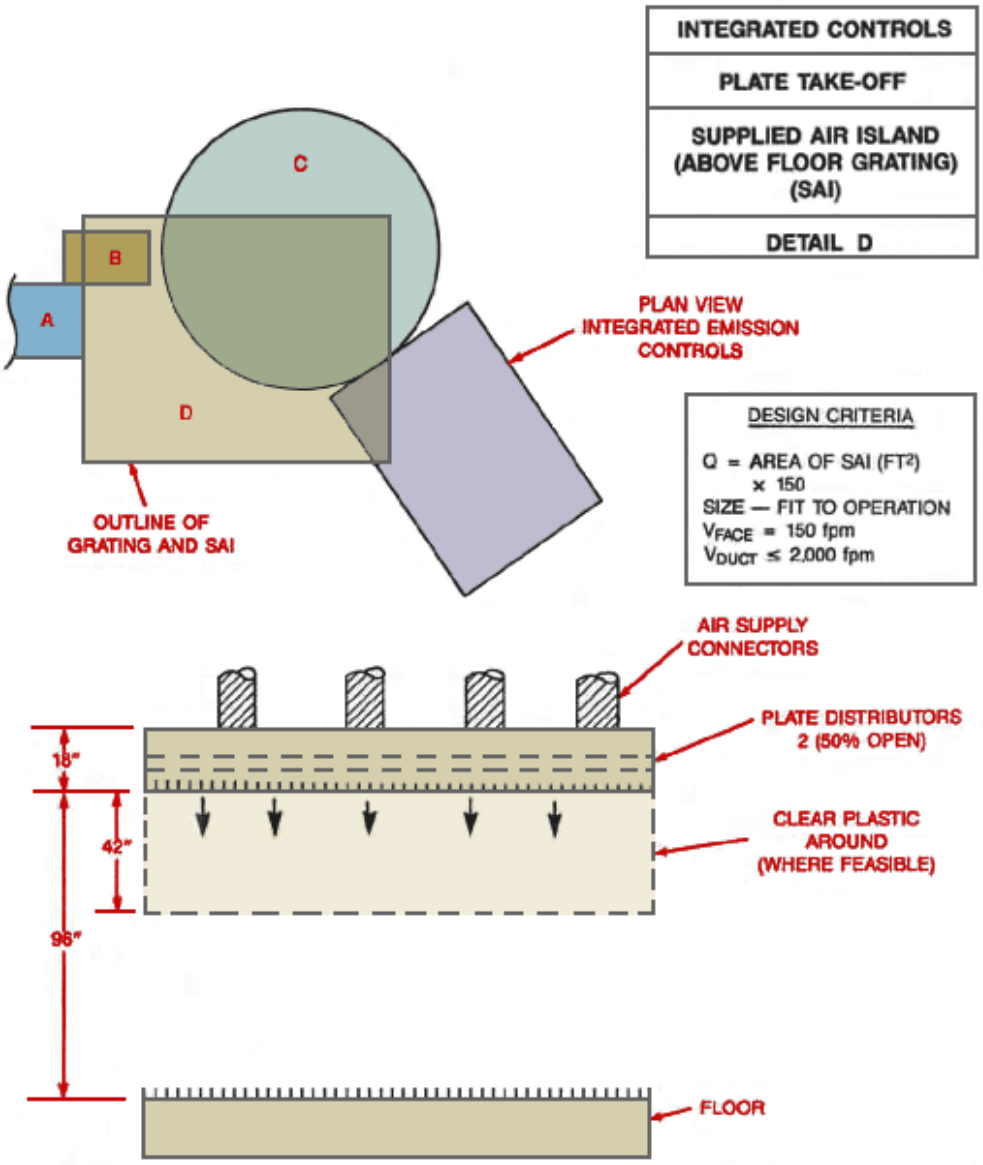

Image of integrated controls, plate take-off operation, Part D

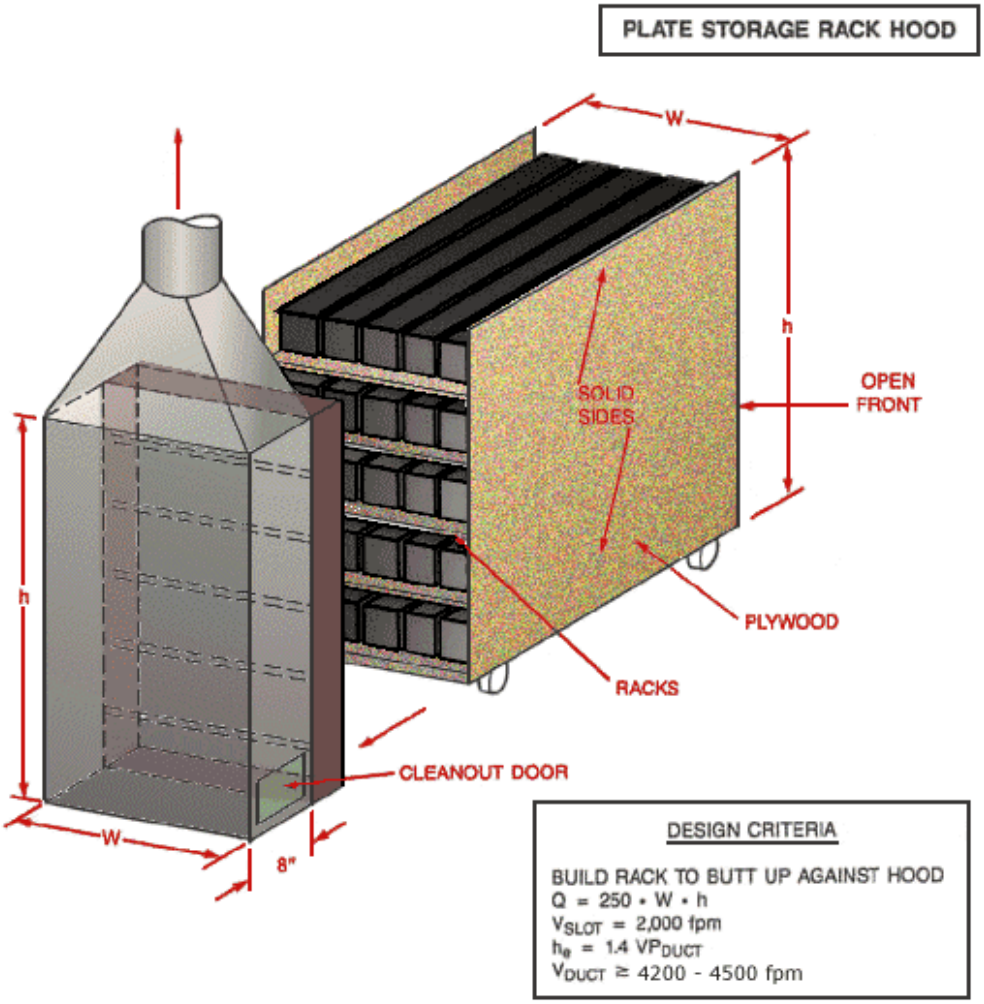

Image of plate storage rack hood

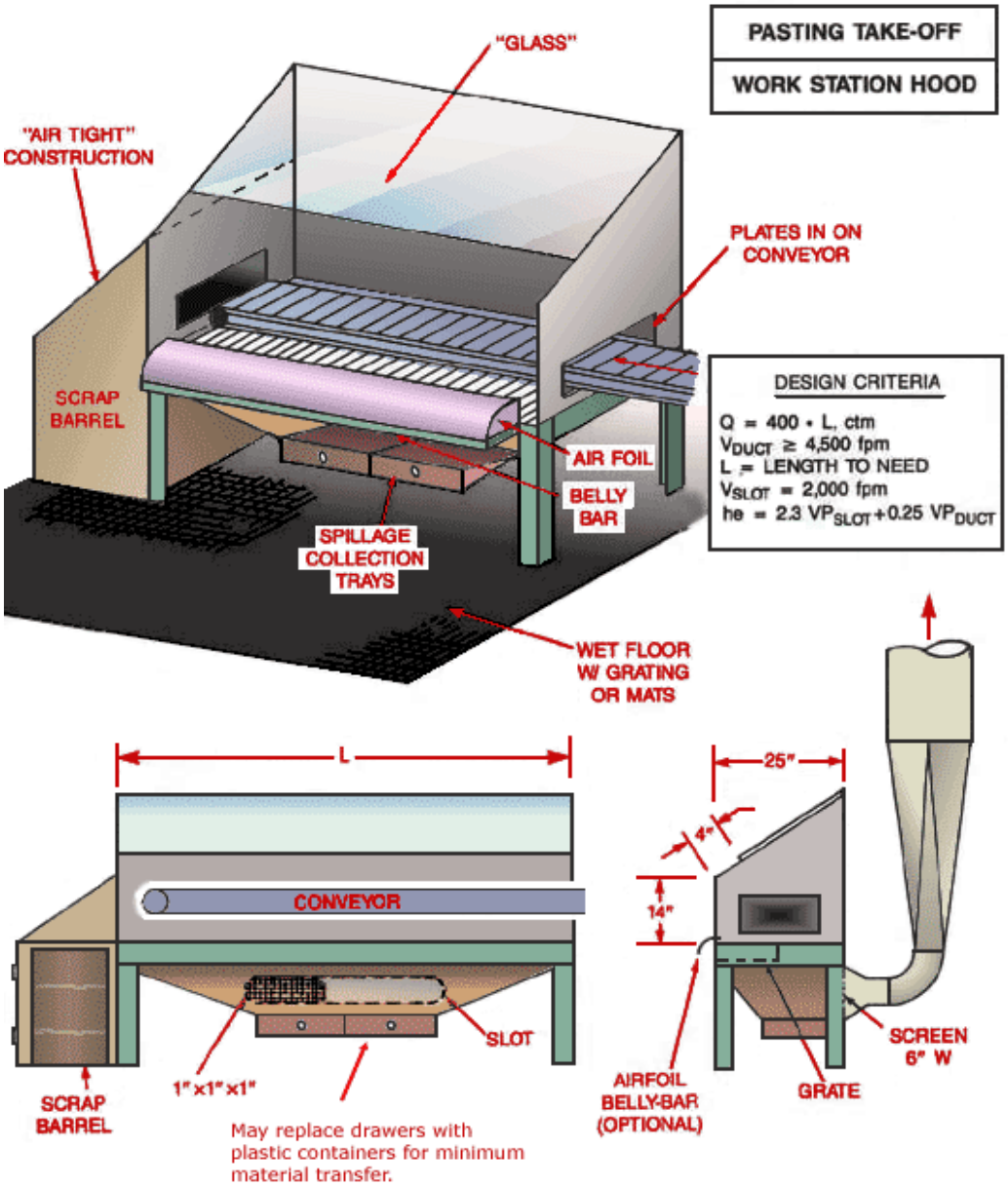

Image of pasting take-off, work station hood

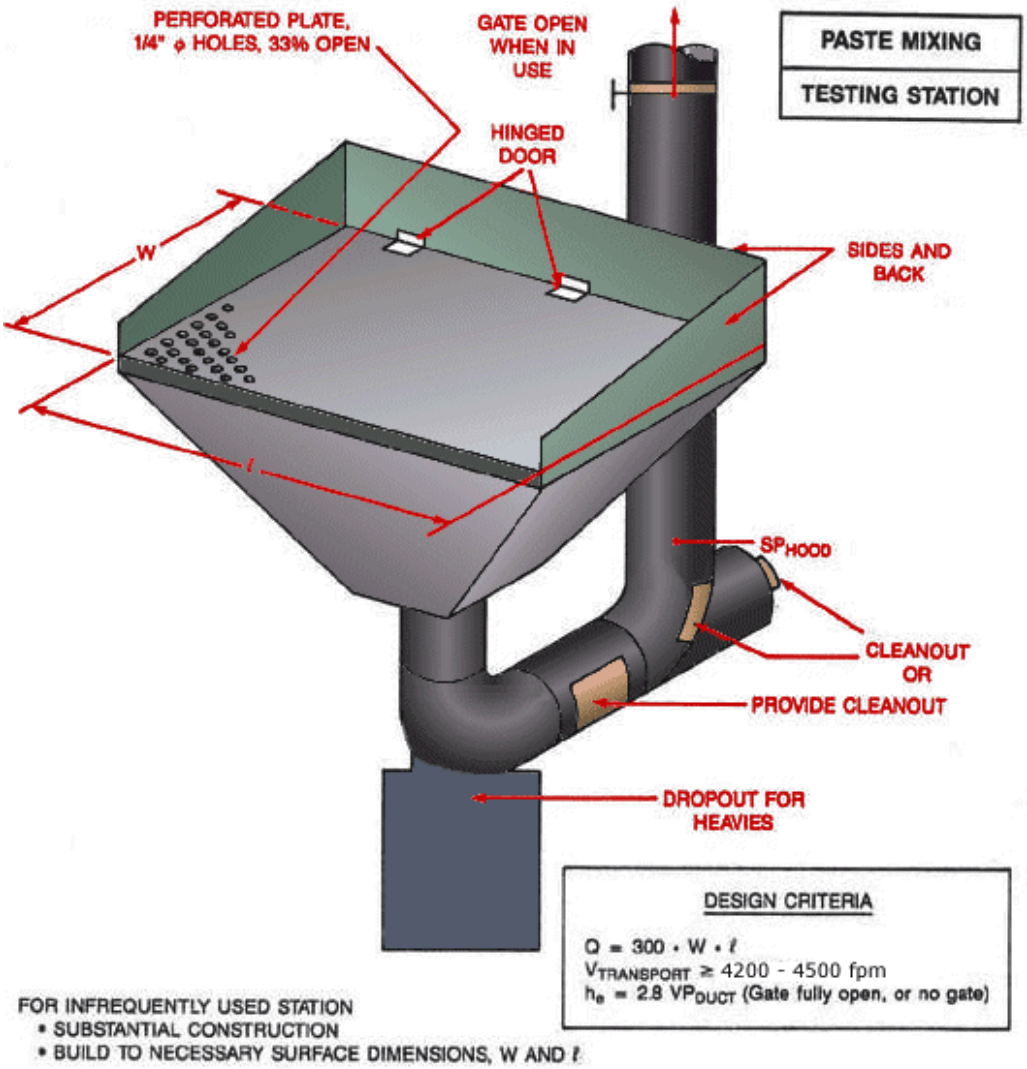

Image of paste mixing, testing station diagram

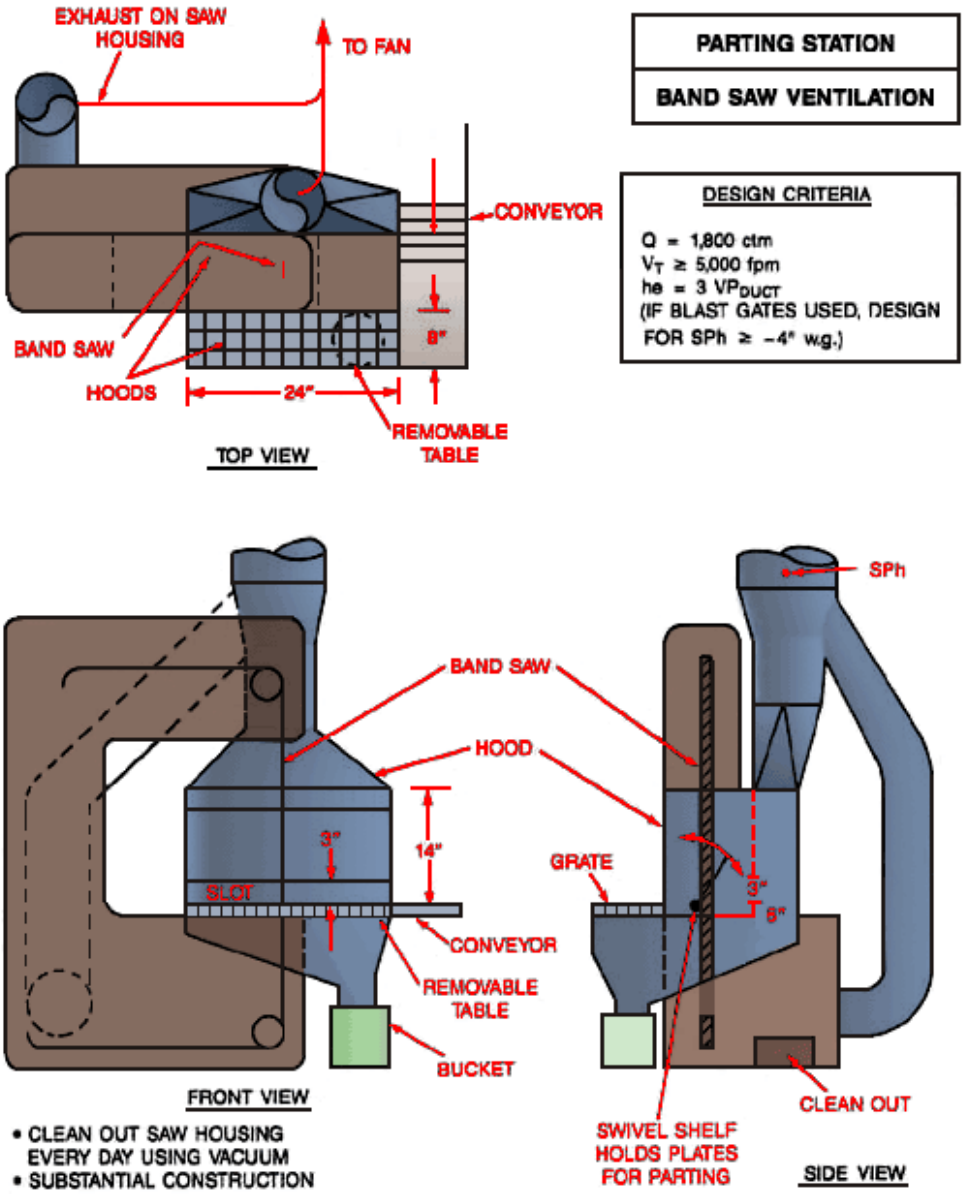

Image of parting station, band saw ventilation

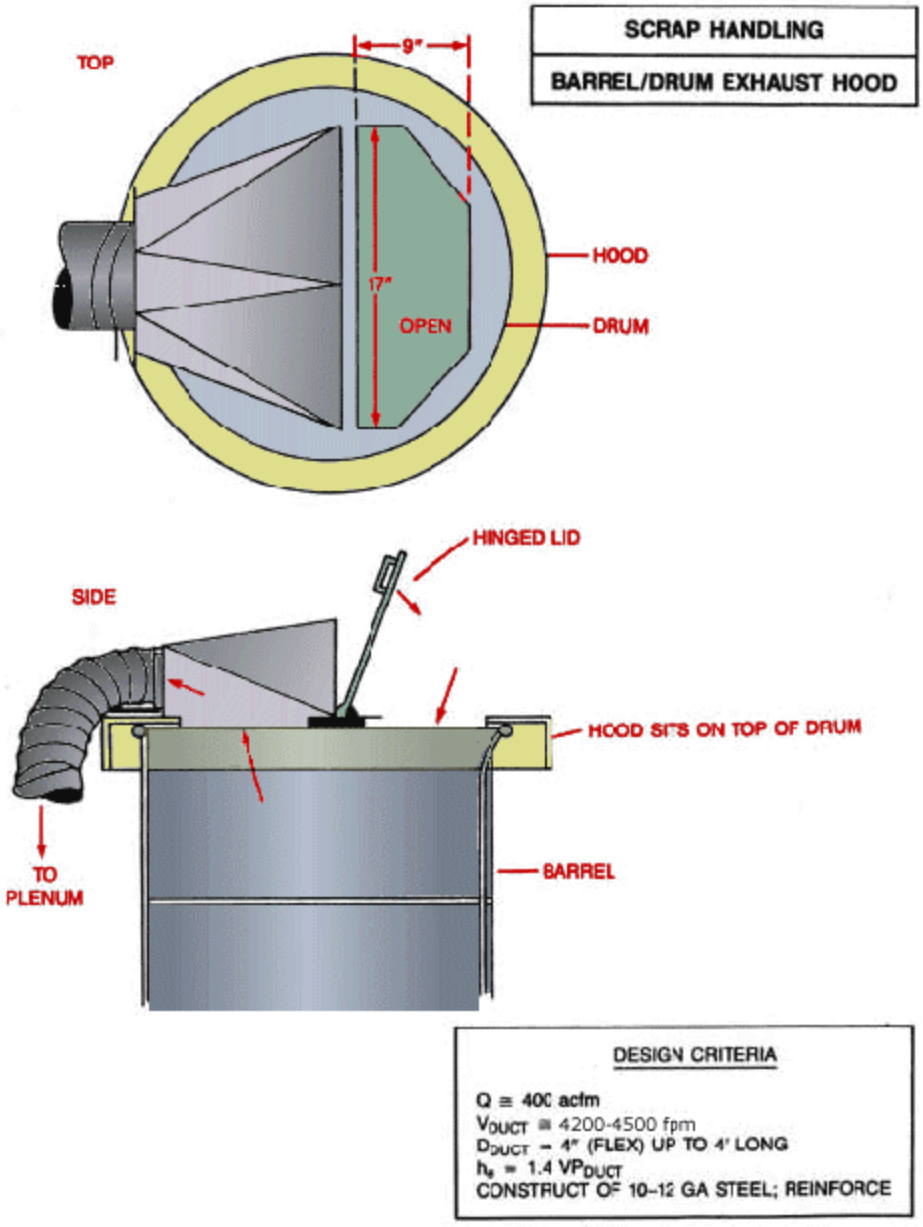

Image of scrap handling, barrel/drum exhaust hood

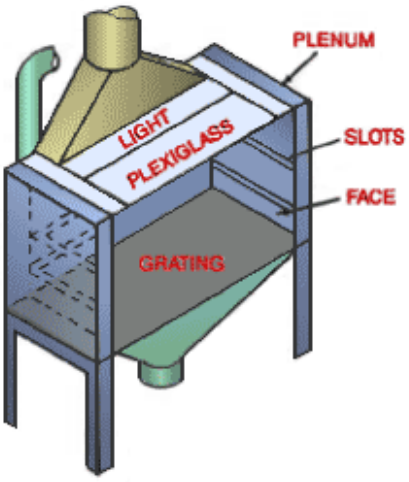

PLATE WRAPPING STATION (INDUSTRIAL)

DESIGN CRITERIA

Q = H x L x 300 (HOOD) + W x L x 200 (GRATE)
(TYPICAL — 4000 ctm)
$V_T \geq$ 4200-4500 fpm
h_B = NA (USE BLAST GATES FOR BALANCING)
SPh (DESIGN) $\geq$ −4" W.G.
V_{SLOT} = 2000 fpm

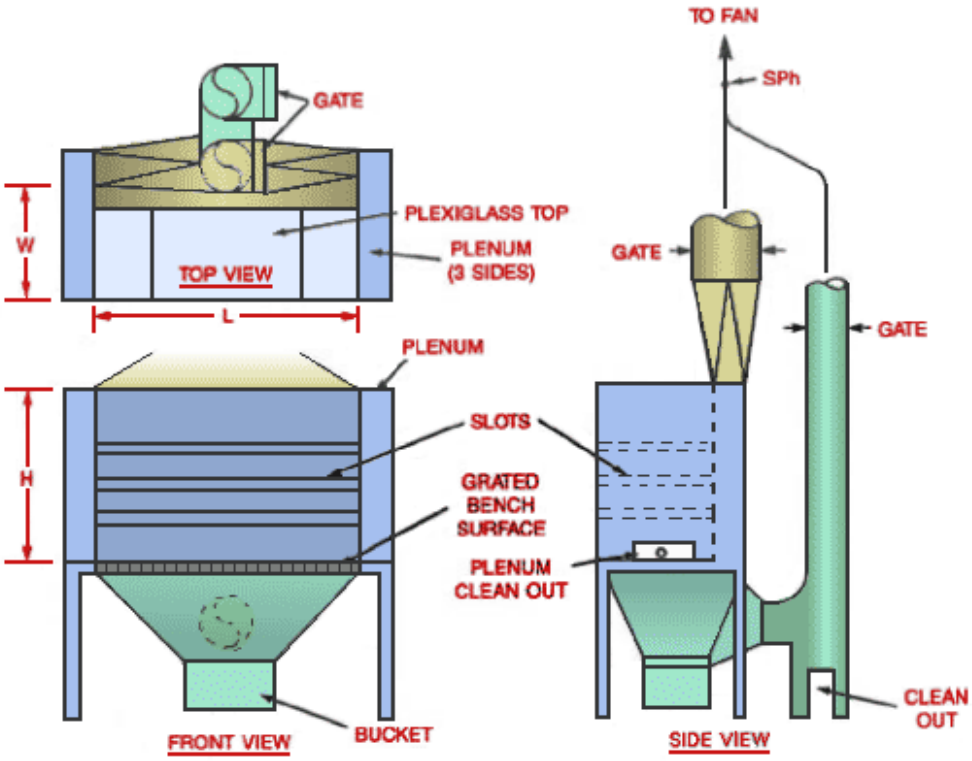

Image of plate wrapping station diagram

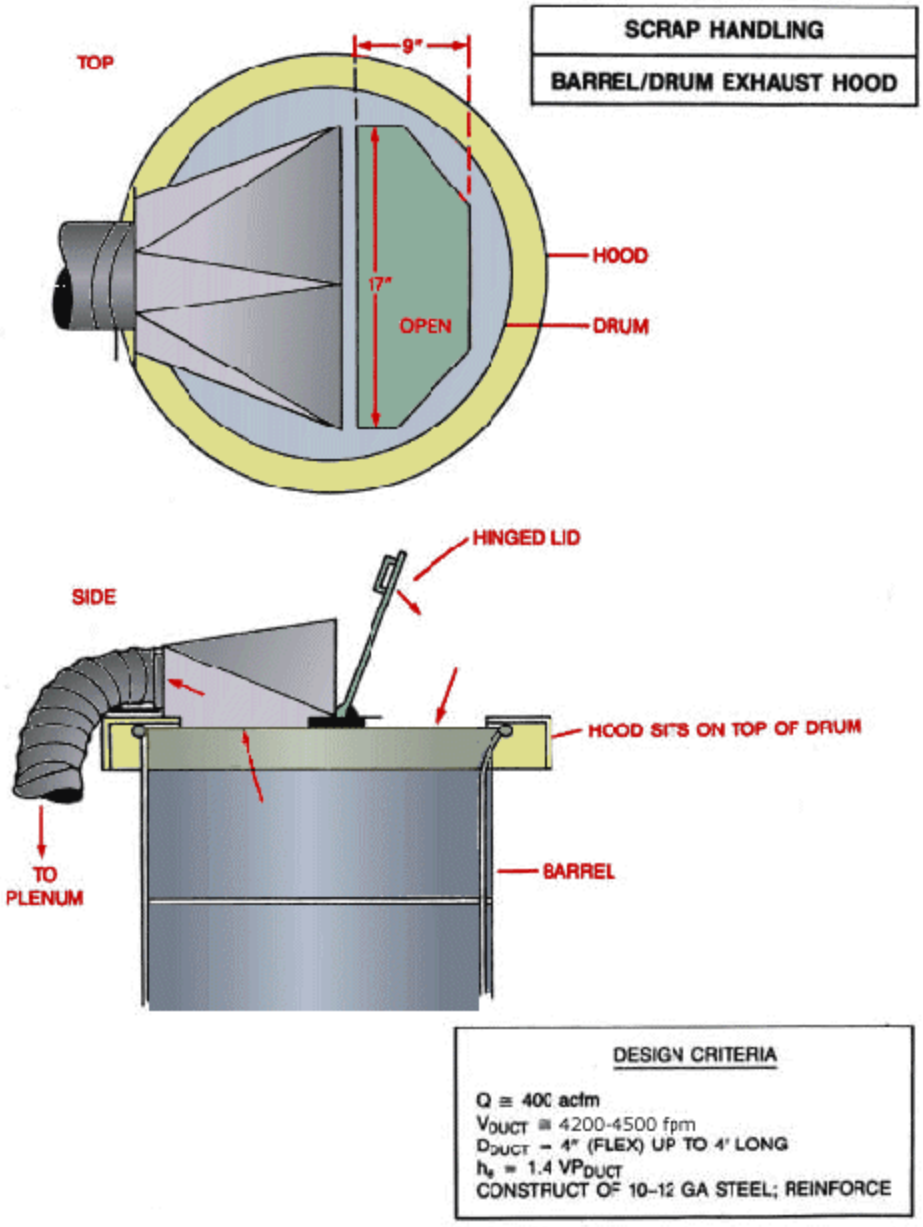

Image of scrap handling, barrel/drum exhaust hood

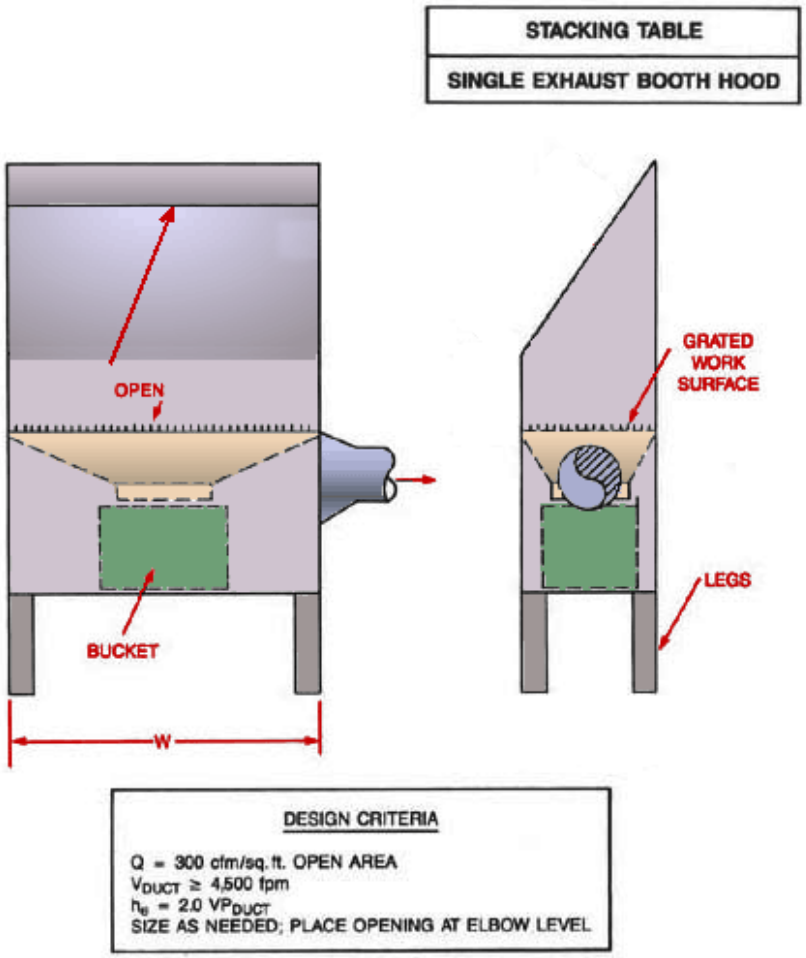

Image of stacking table, single exhaust booth hood

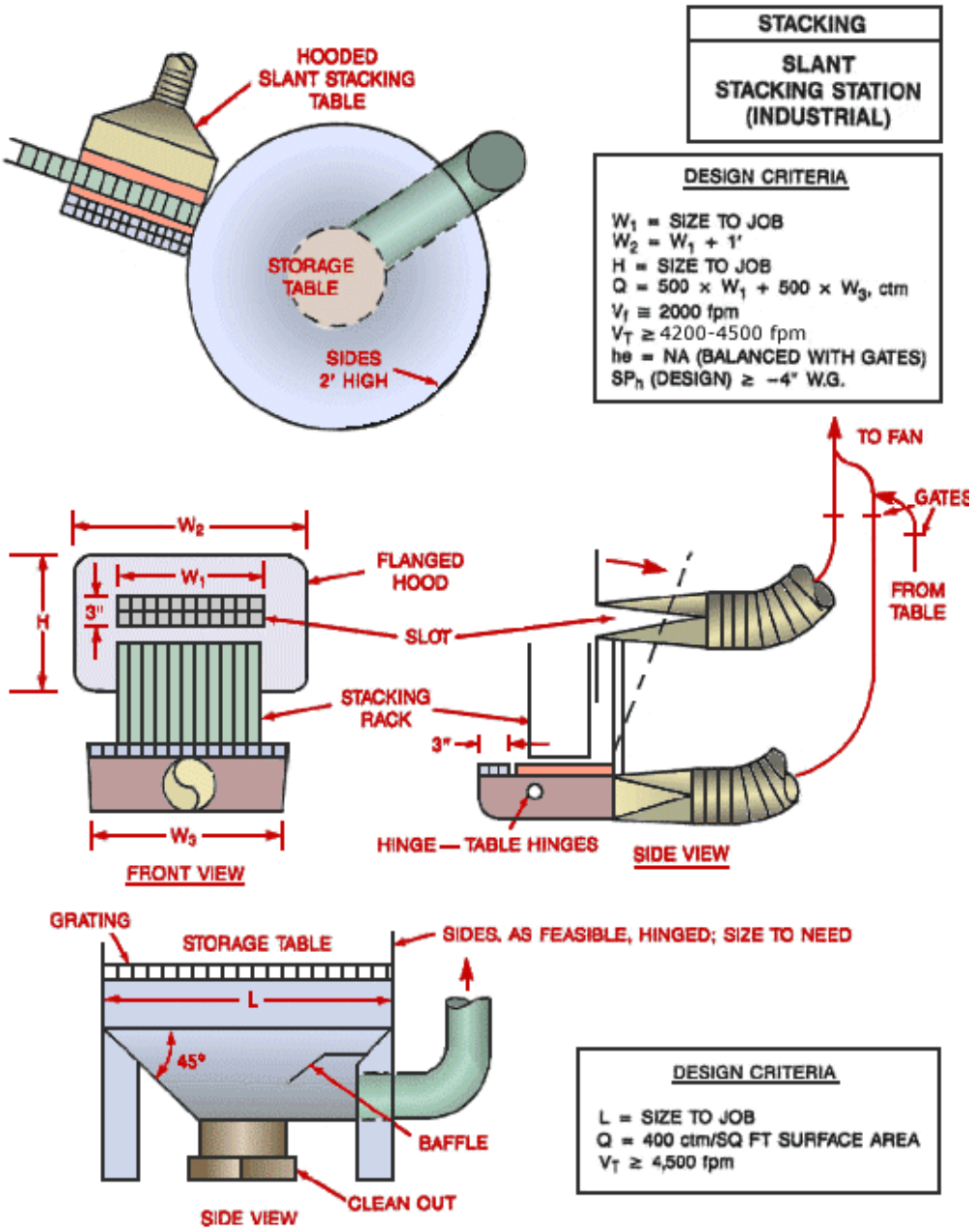

Image of slant stacking station (industrial)

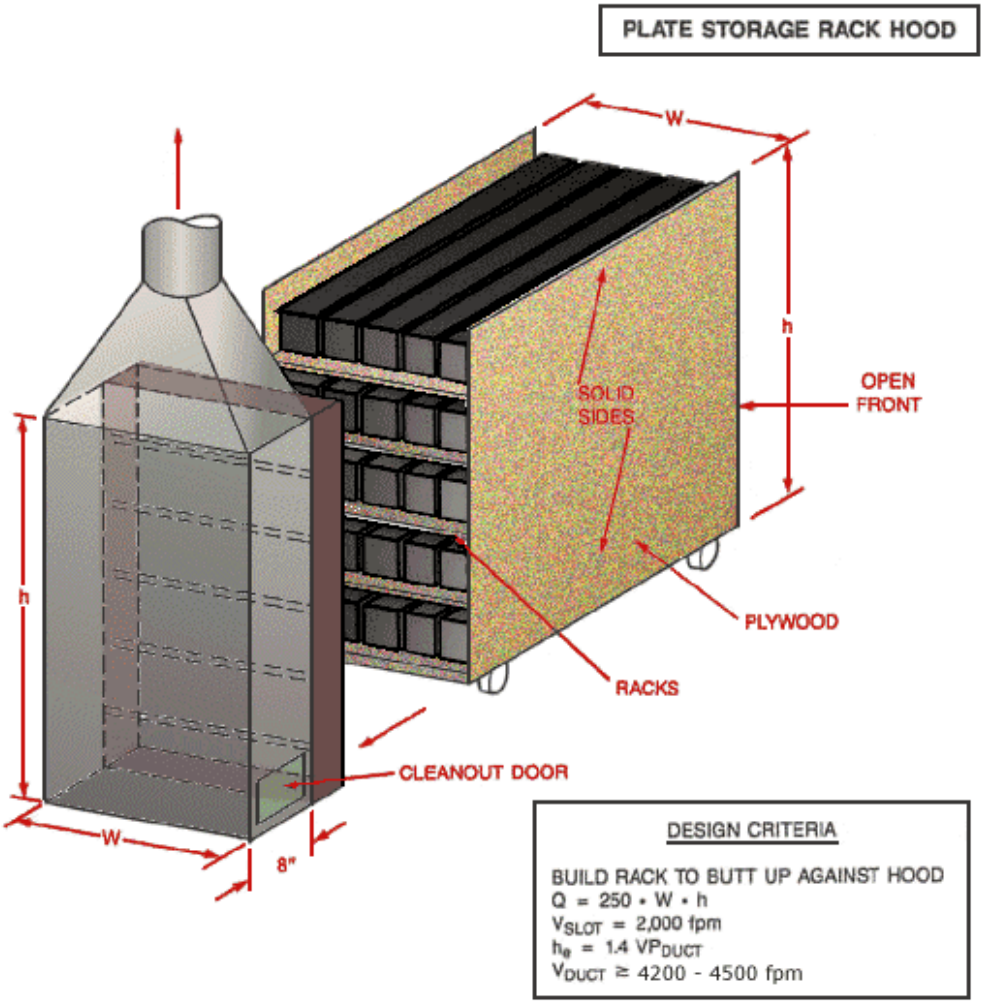

Image of plate storage rack hood

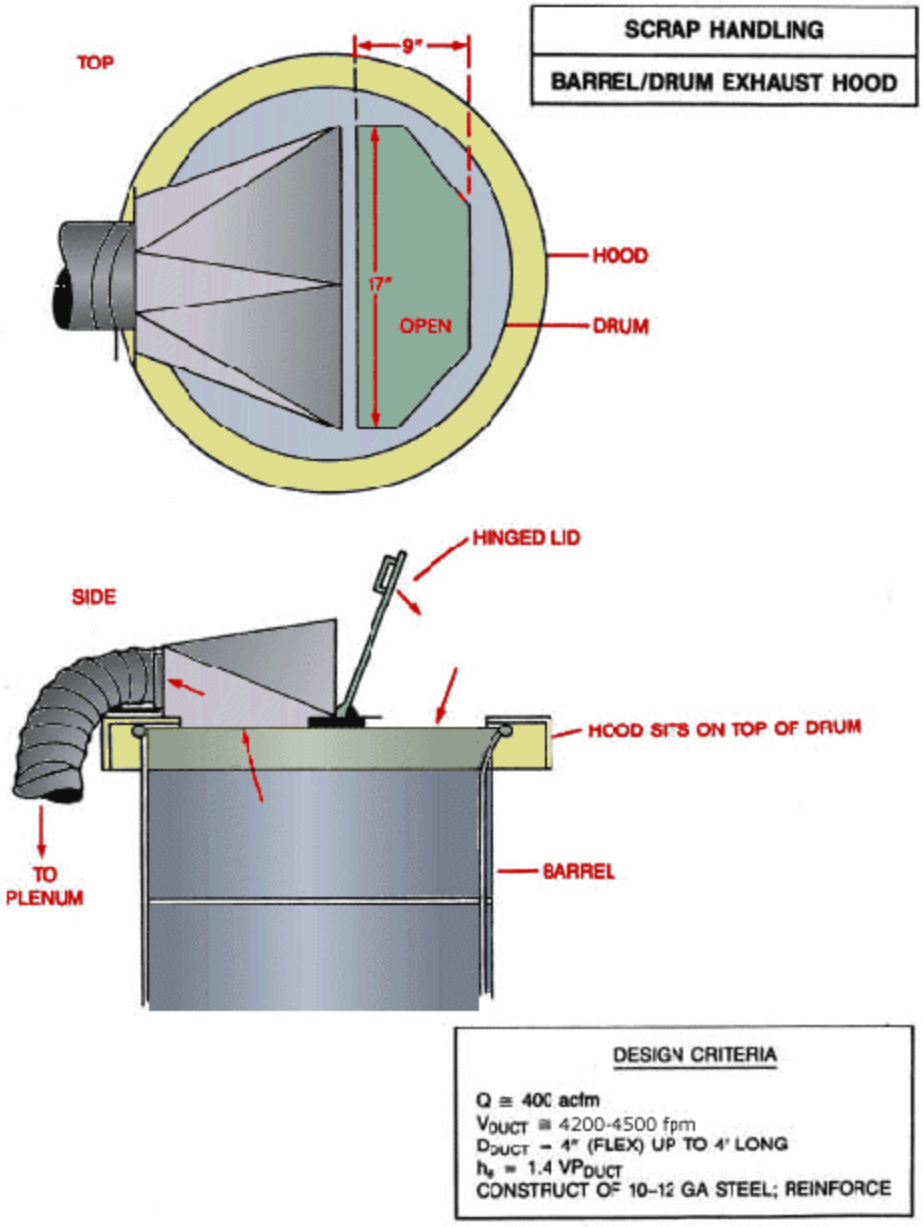

Image of scrap handling, barrel/drum exhaust hood

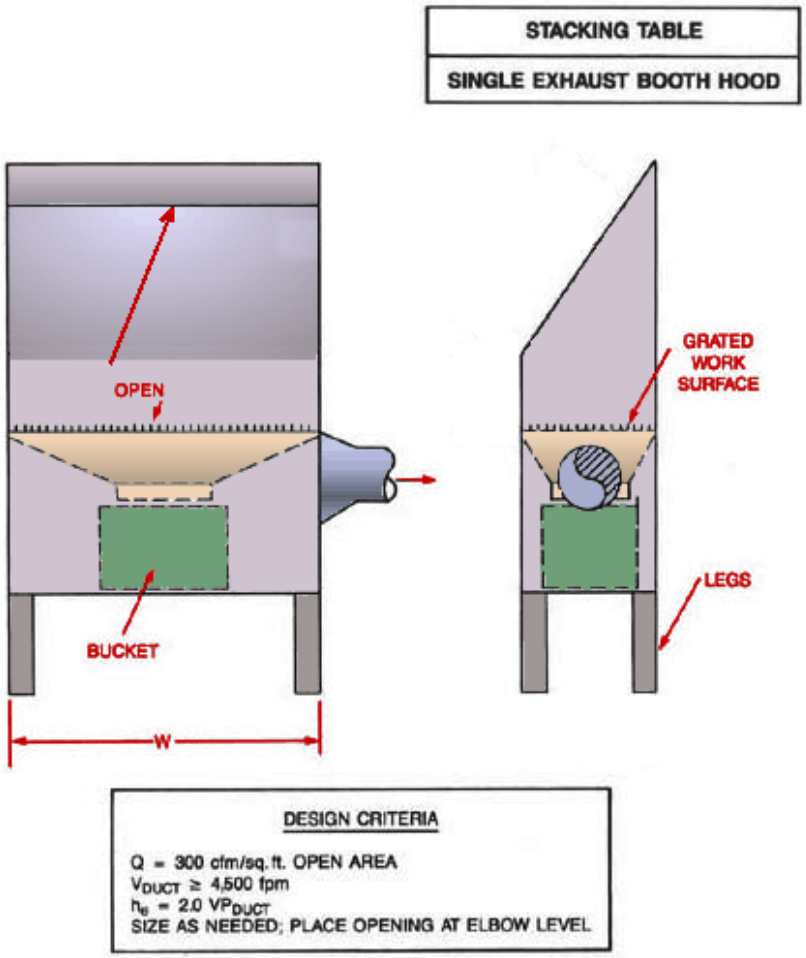

Image of stacking table, single exhaust booth hood

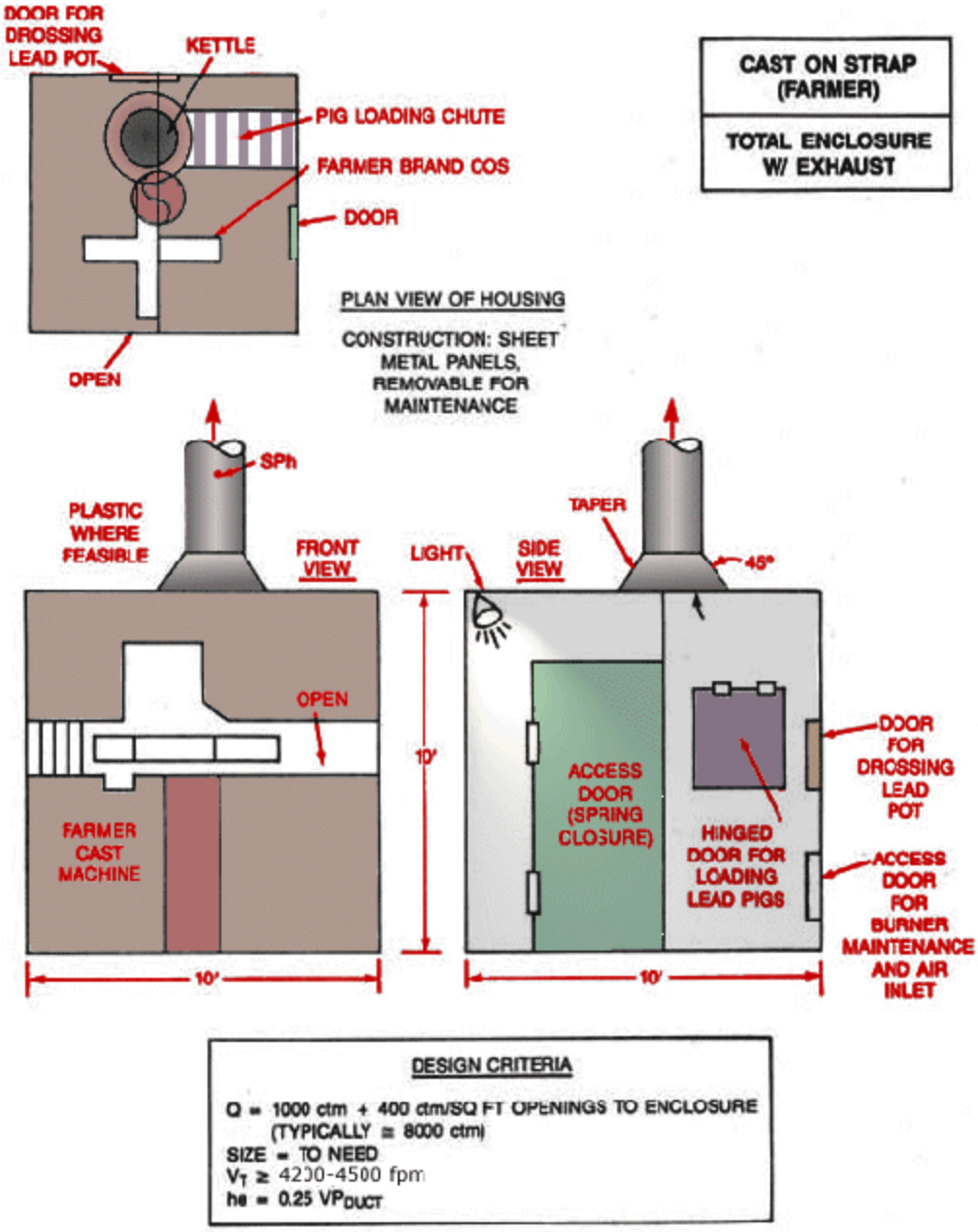

DESIGN CRITERIA

Q = 1000 ctm + 400 ctm/SQ FT OPENINGS TO ENCLOSURE (TYPICALLY ≅ 8000 ctm)
SIZE = TO NEED
$V_T \geq$ 4230-4500 fpm
he = 0.25 VP_{DUCT}

Image of farmer cast on strap machine

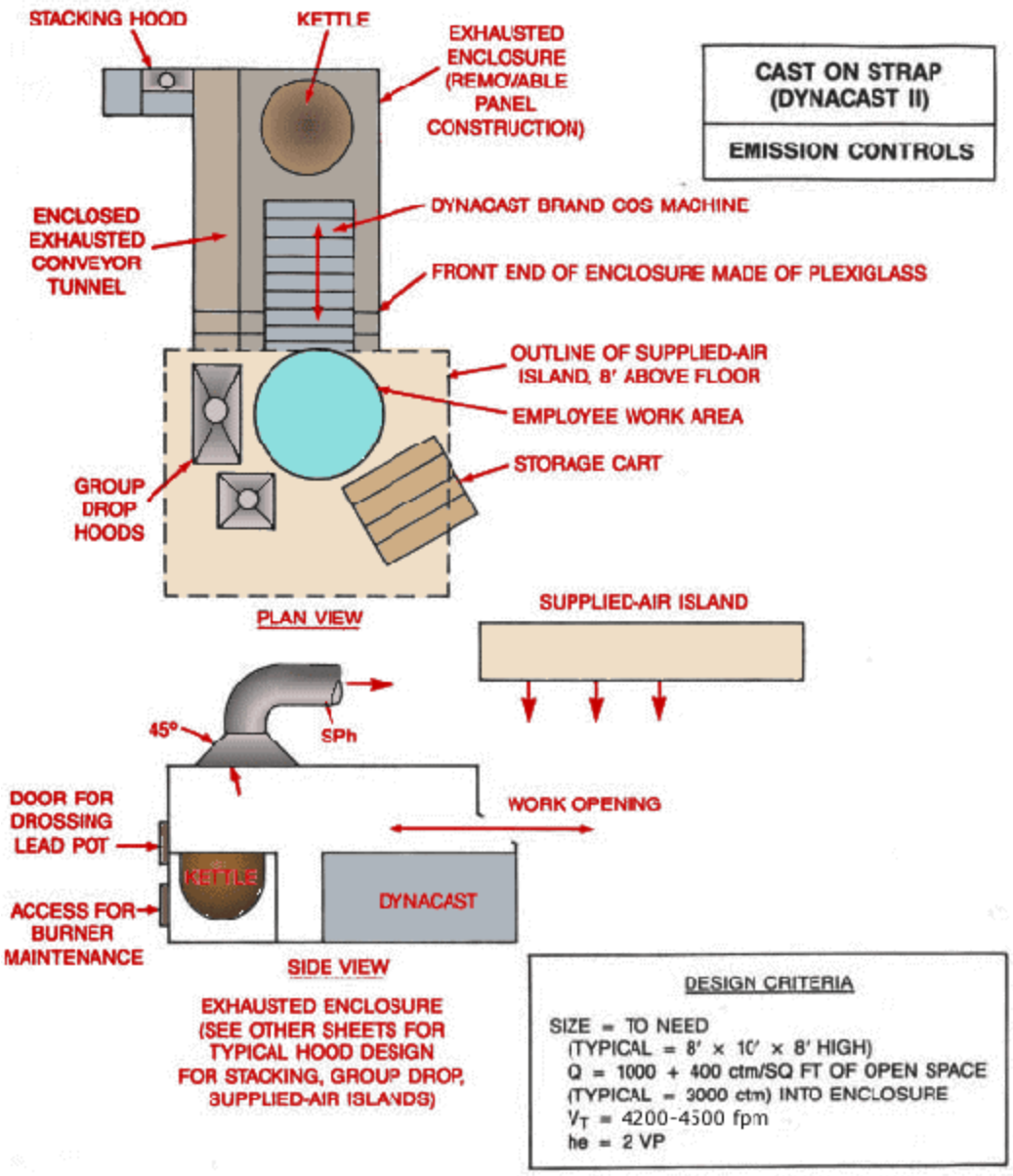

Image of dynacast cast on strap machine

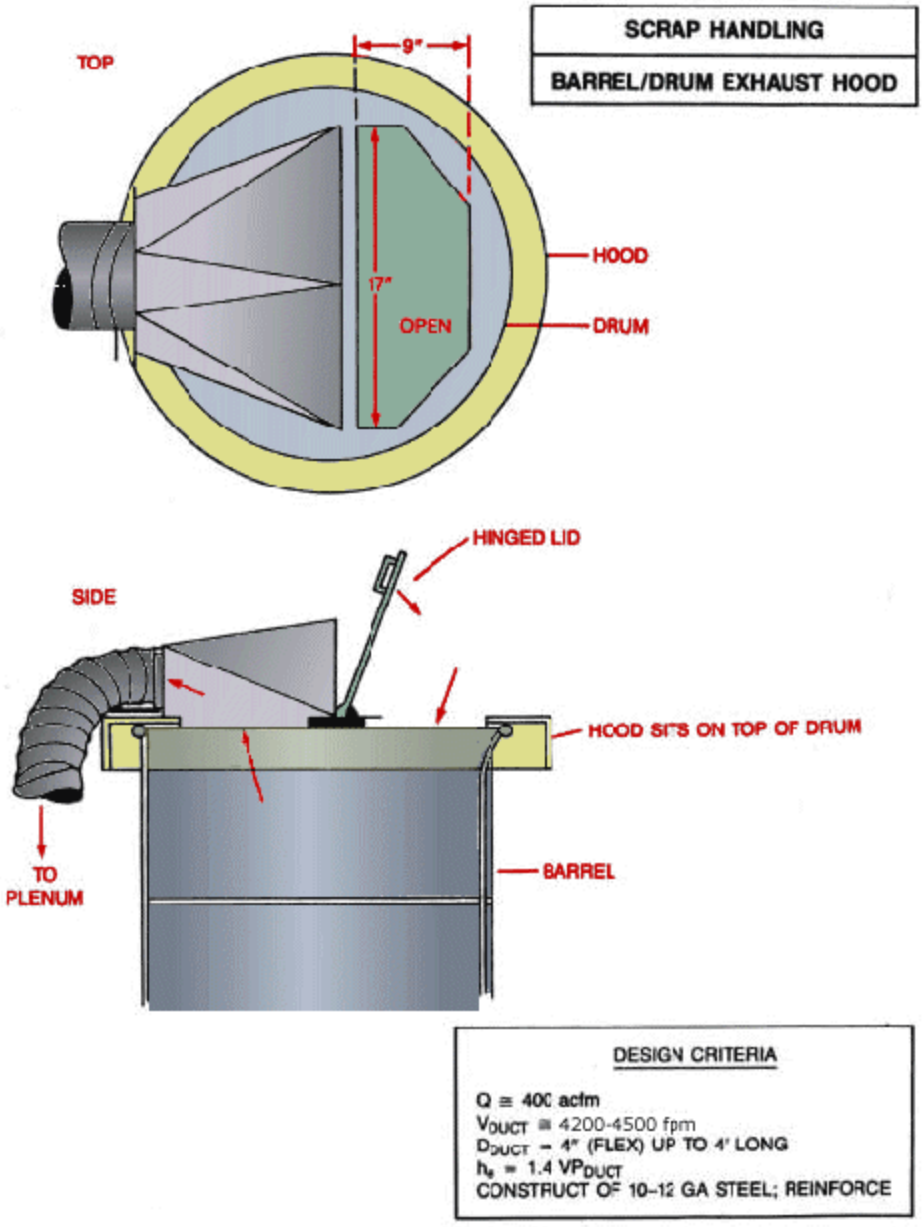

Image of scrap handling, barrel/drum exhaust hood

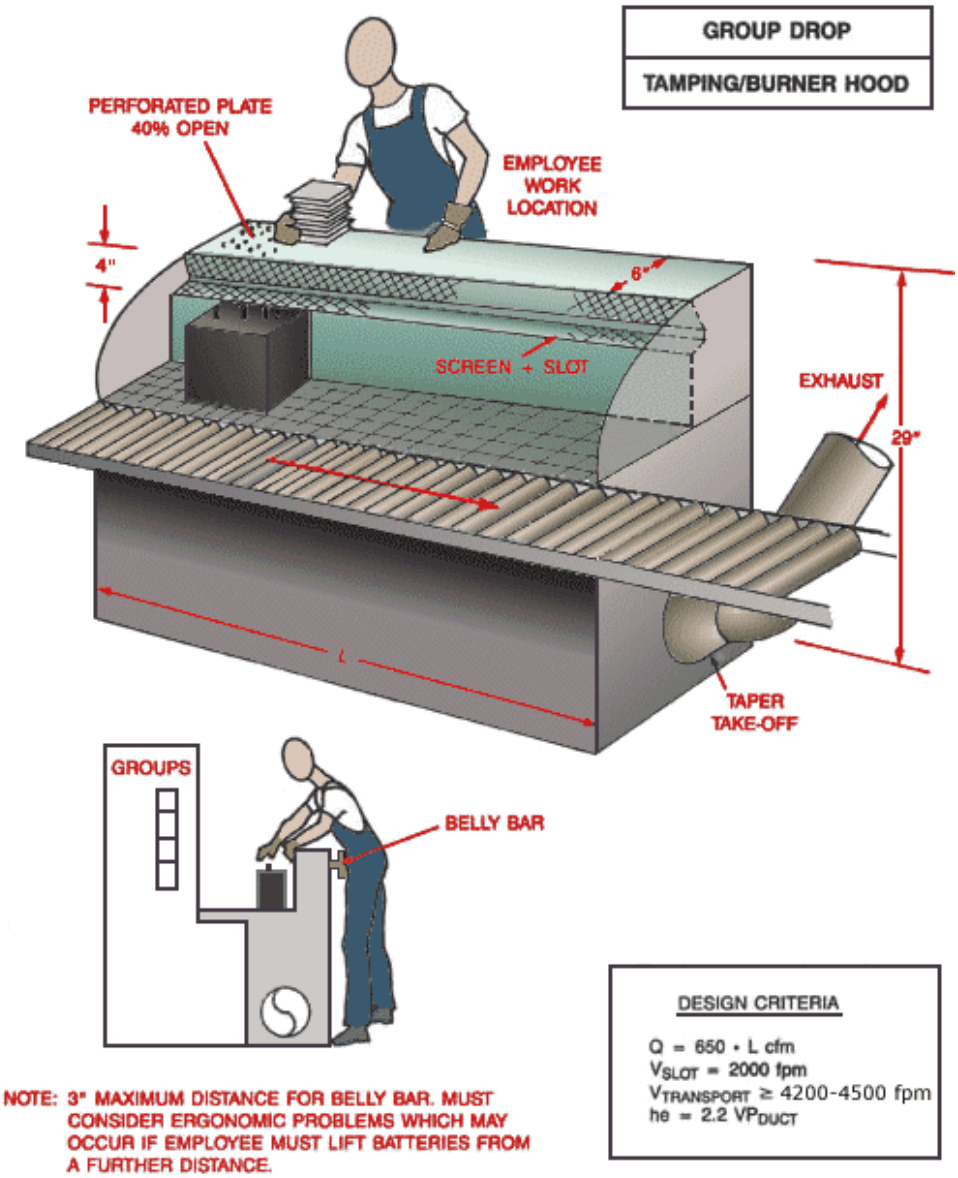

Image of tamping/burner hood

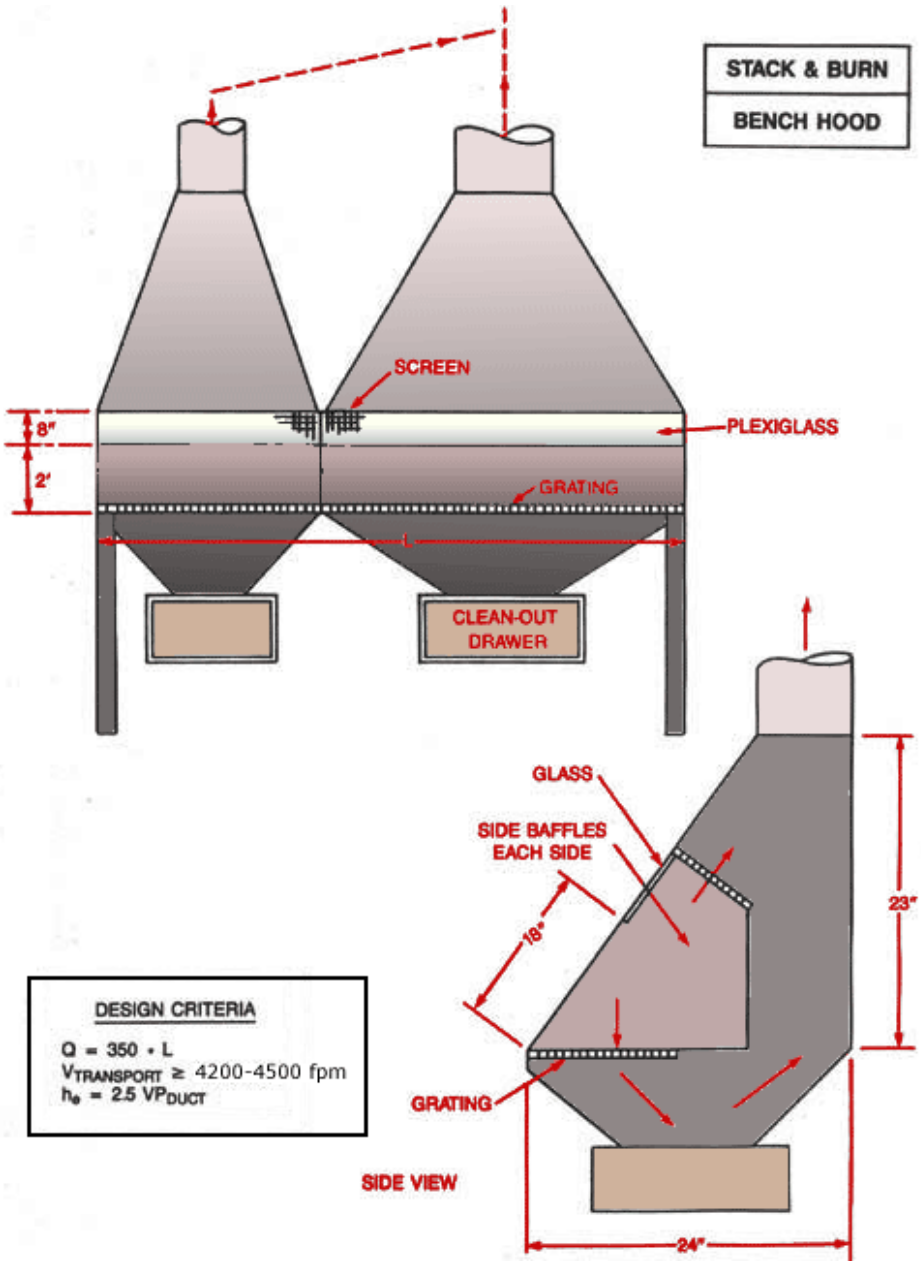

Image of bench hood

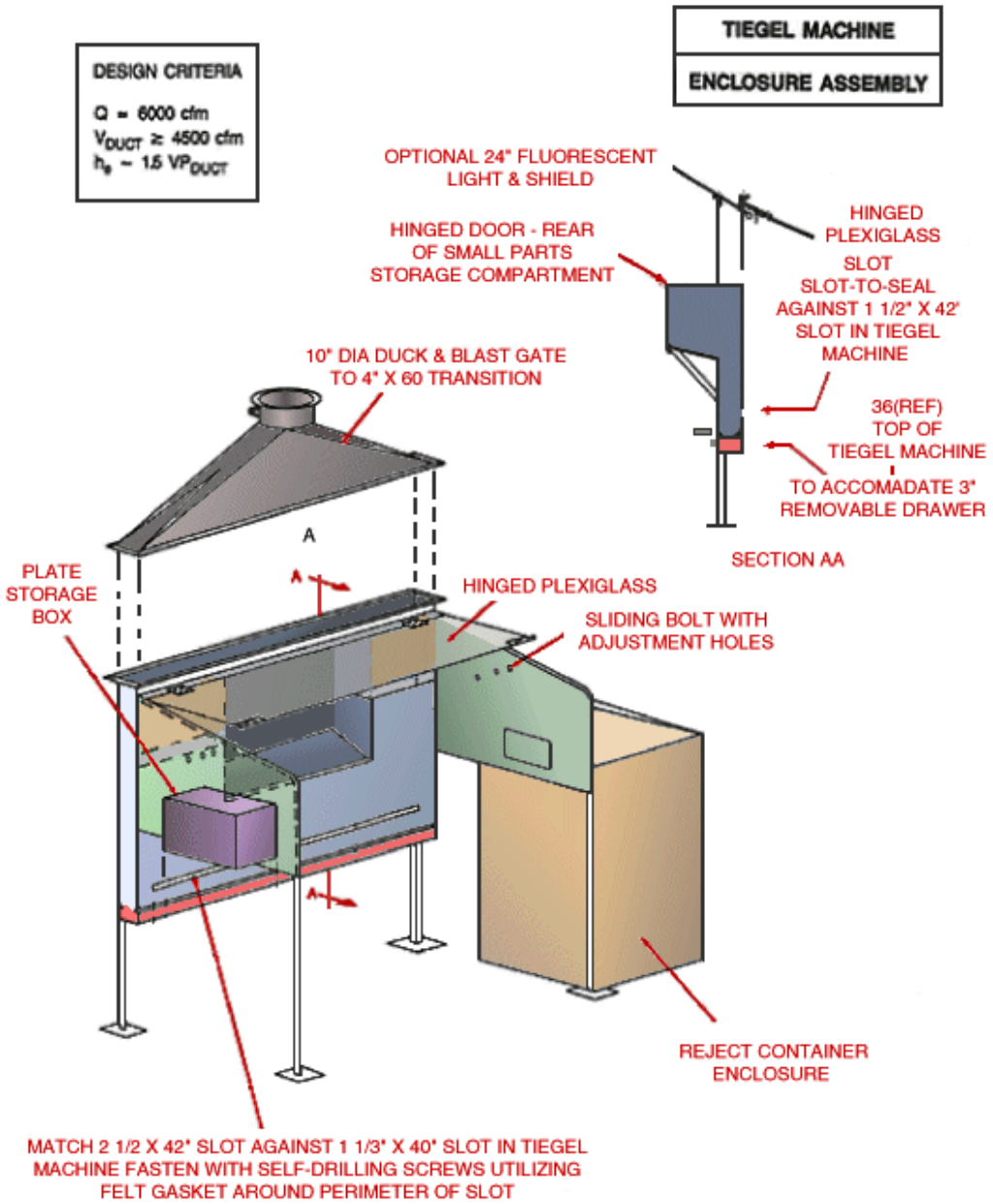

Image of tiegal machine

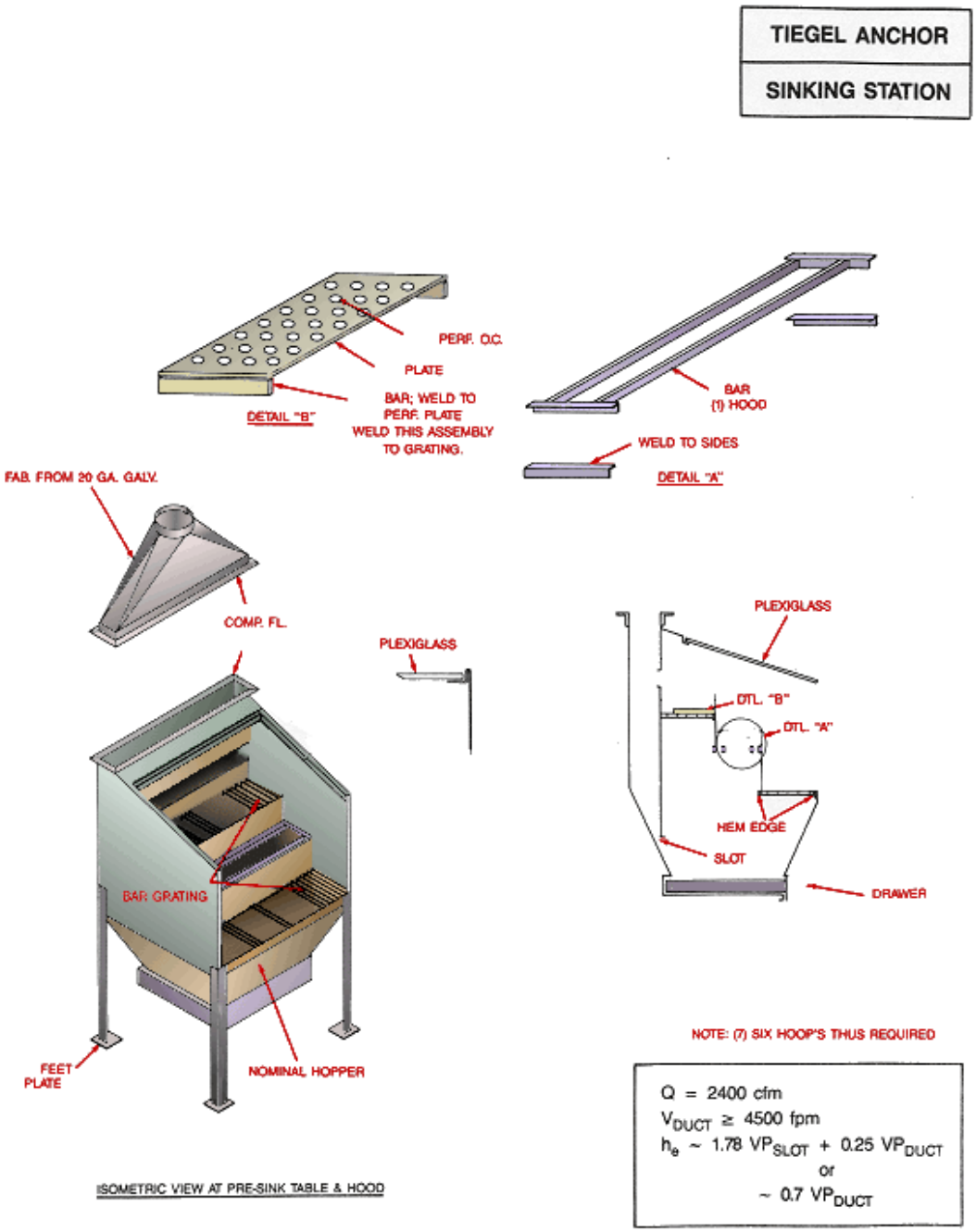

Image of tiegal anchor

Portable Tool Exhaust
(High Velocity/Low Volume)

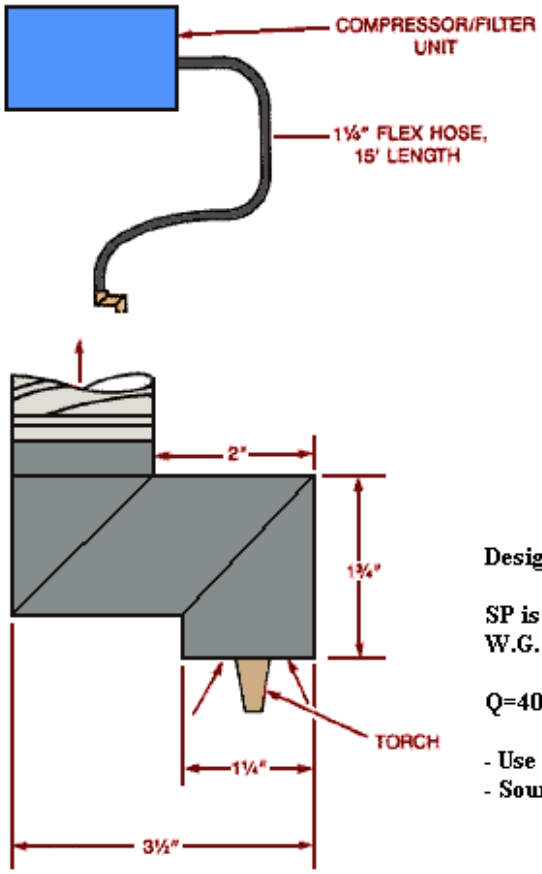

Design Criteria:

SP is greater than or equal to 72" W.G. (inlet)

Q=40 cfm

- Use steel mold
- Source must be within 1" of hood

Image of post burning, portable tool exhaust

Portable Tool Exhaust
(High Velocity/Low Volume)

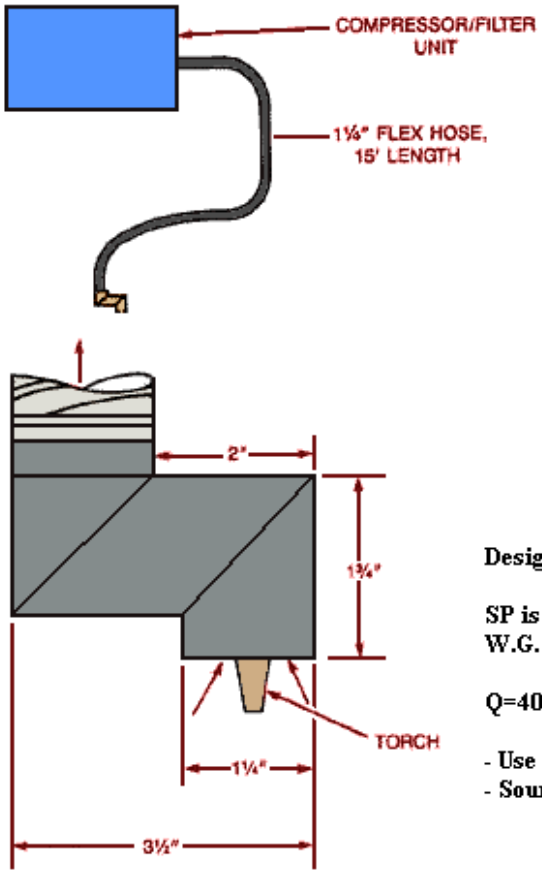

Design Criteria:

SP is greater than or equal to 72" W.G. (inlet)

Q=40 cfm

- Use steel mold
- Source must be within 1" of hood

Image of post burning, portable tool exhaust

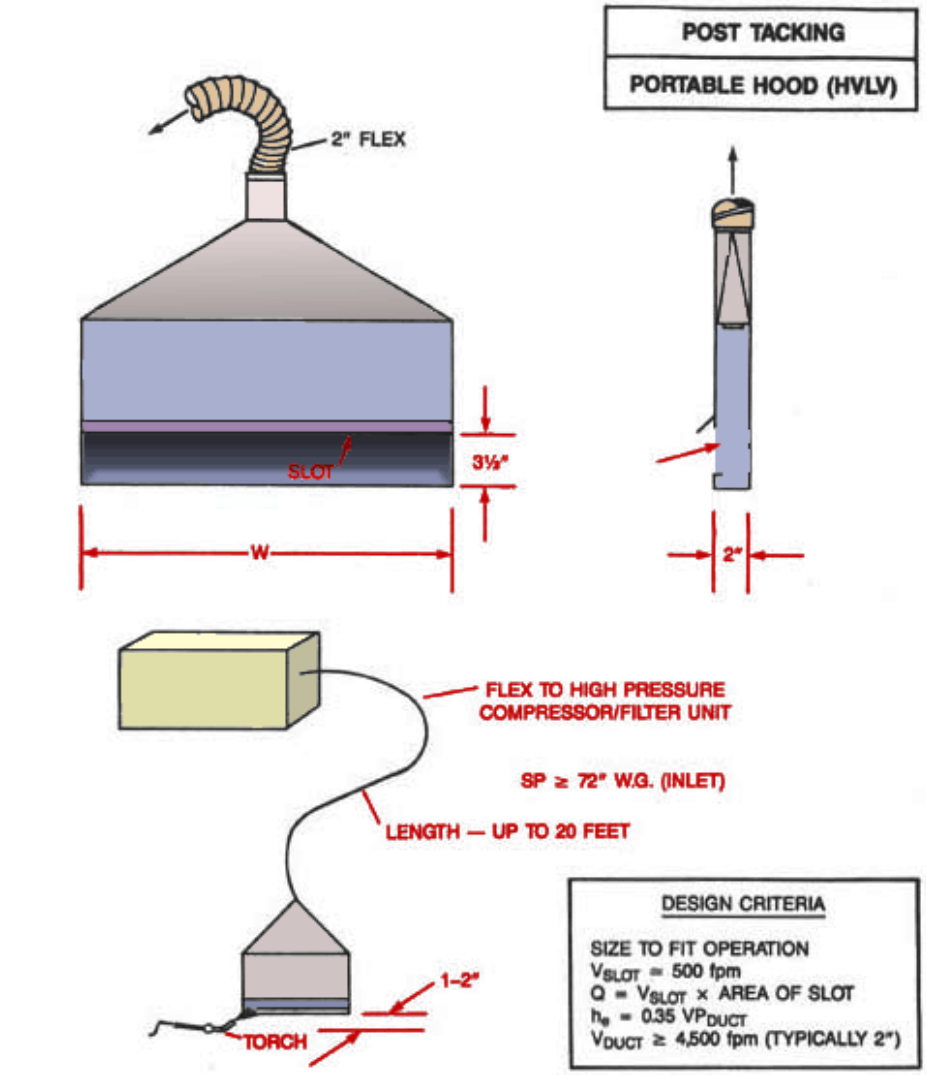

- HOOD MUST COME WITHIN INCHES OF EMISSION SOURCE.
- TORCH FLAME MUST BE DIRECTED AT SLOT.

Image of post tracking, portable hood

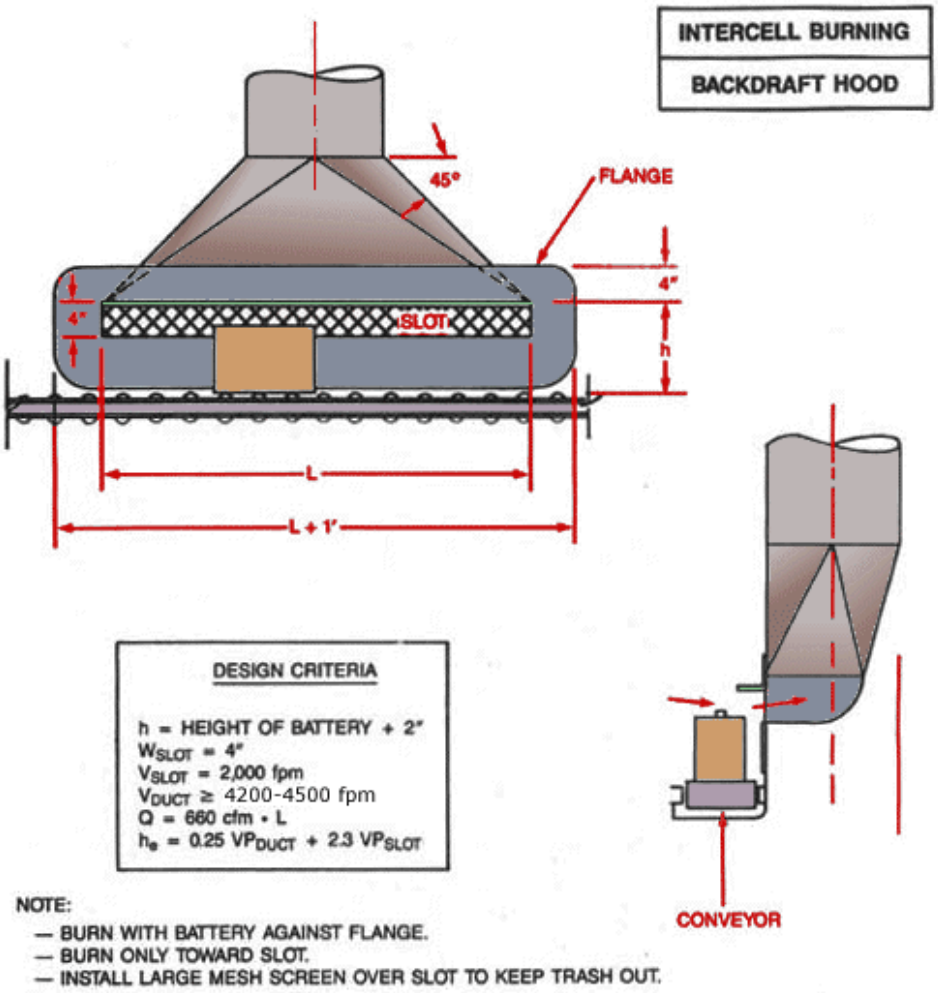

NOTE:
- BURN WITH BATTERY AGAINST FLANGE.
- BURN ONLY TOWARD SLOT.
- INSTALL LARGE MESH SCREEN OVER SLOT TO KEEP TRASH OUT.

Image of post/intercell burning, backdraft hood

Portable Tool Exhaust
(High Velocity/Low Volume)

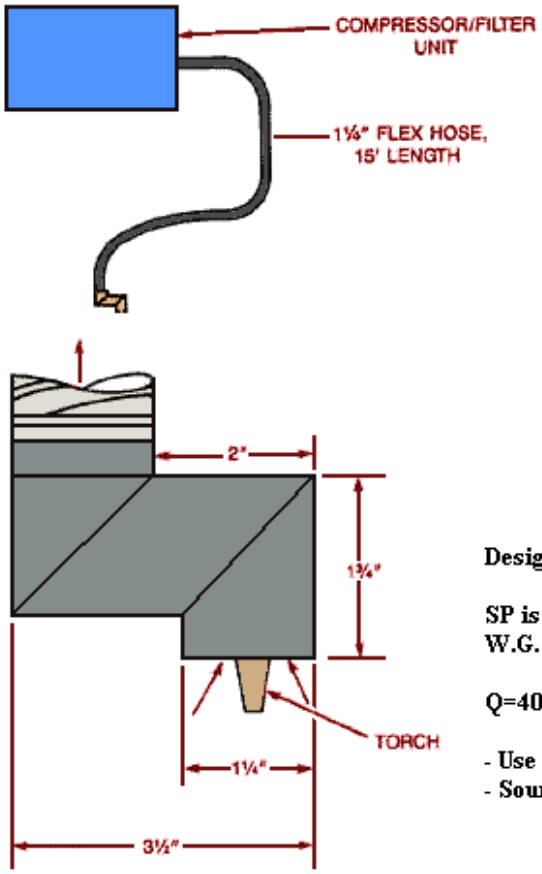

Design Criteria:

SP is greater than or equal to 72" W.G. (inlet)

Q=40 cfm

- Use steel mold
- Source must be within 1" of hood

Image of post burning, portable tool exhaust

Scrap Handling Remelt Pot and Slag/Dross/Skim Hood

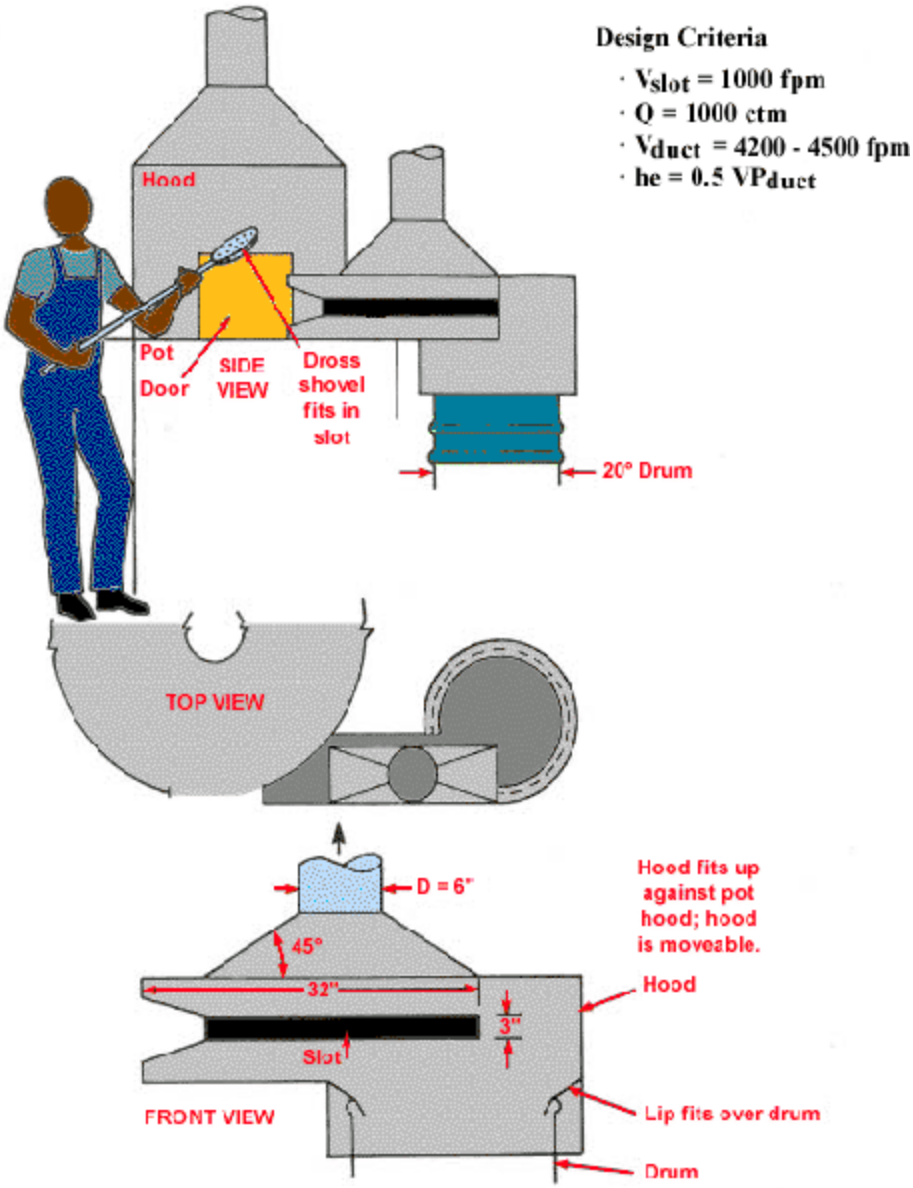

Image of scrap pot and dross hood diagram

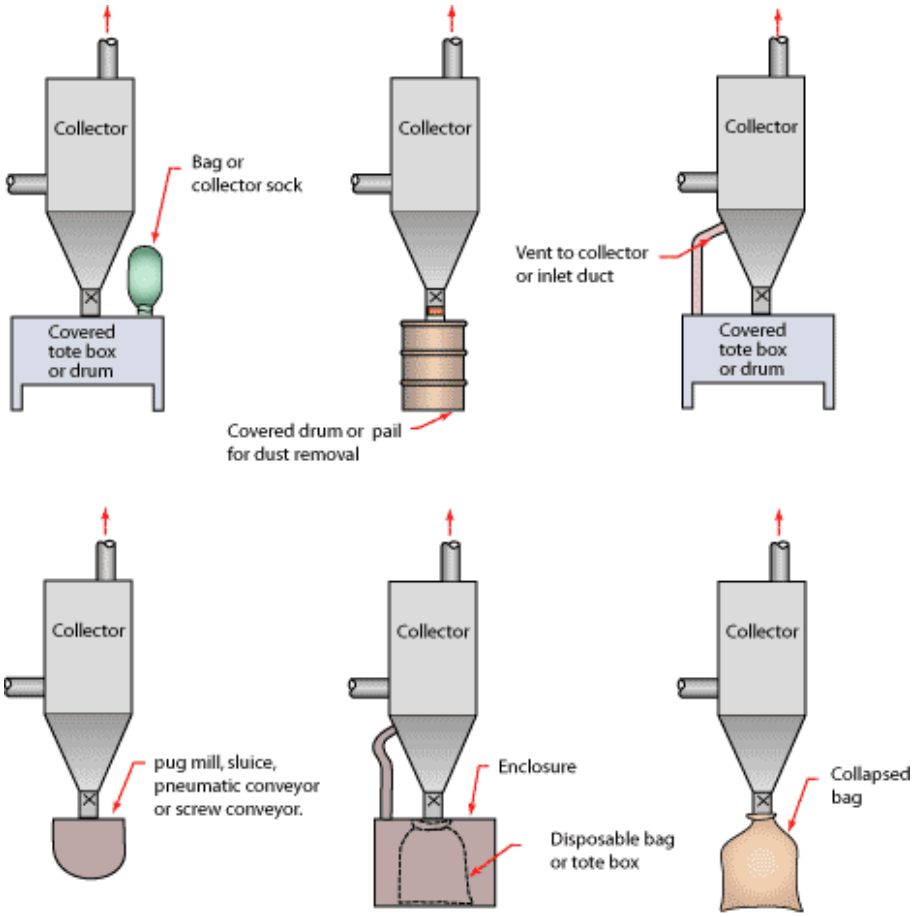

American Conference of Governmental Industrial Hygienists	Date: 3-97
	Figure: 4-1

From American Conference of Governmental Industrial Hygienists (ACGIH®), Figure 4-1, *Industrial Ventilation : A Manual of Recommended Practice*, 23rd Edition. Copyright 1998. Reprinted with permission.

Image of dry type dust collectors dust disposal

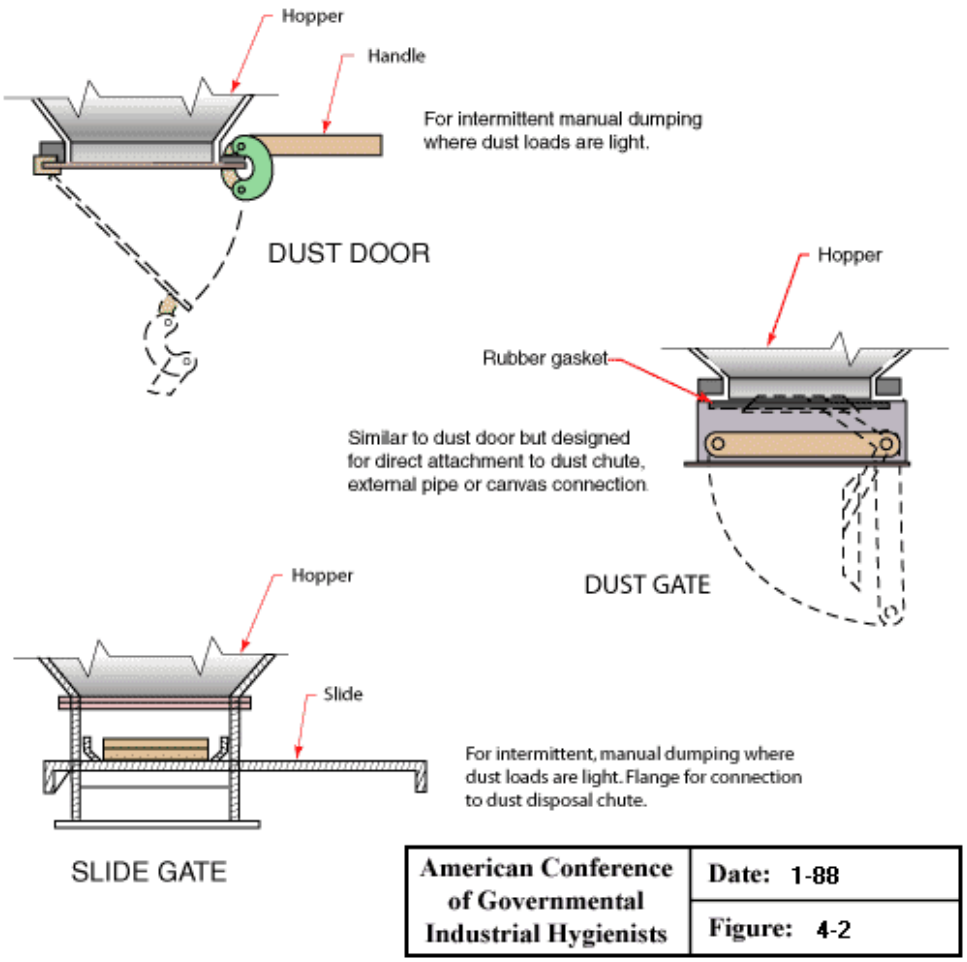

From American Conference of Governmental Industrial Hygienists (ACGIH®), Figure 4-2, *Industrial Ventilation : A Manual of Recommended Practice*, 23rd Edition. Copyright 1998. Reprinted with permission.

Image of dry type dust collectors discharge valves

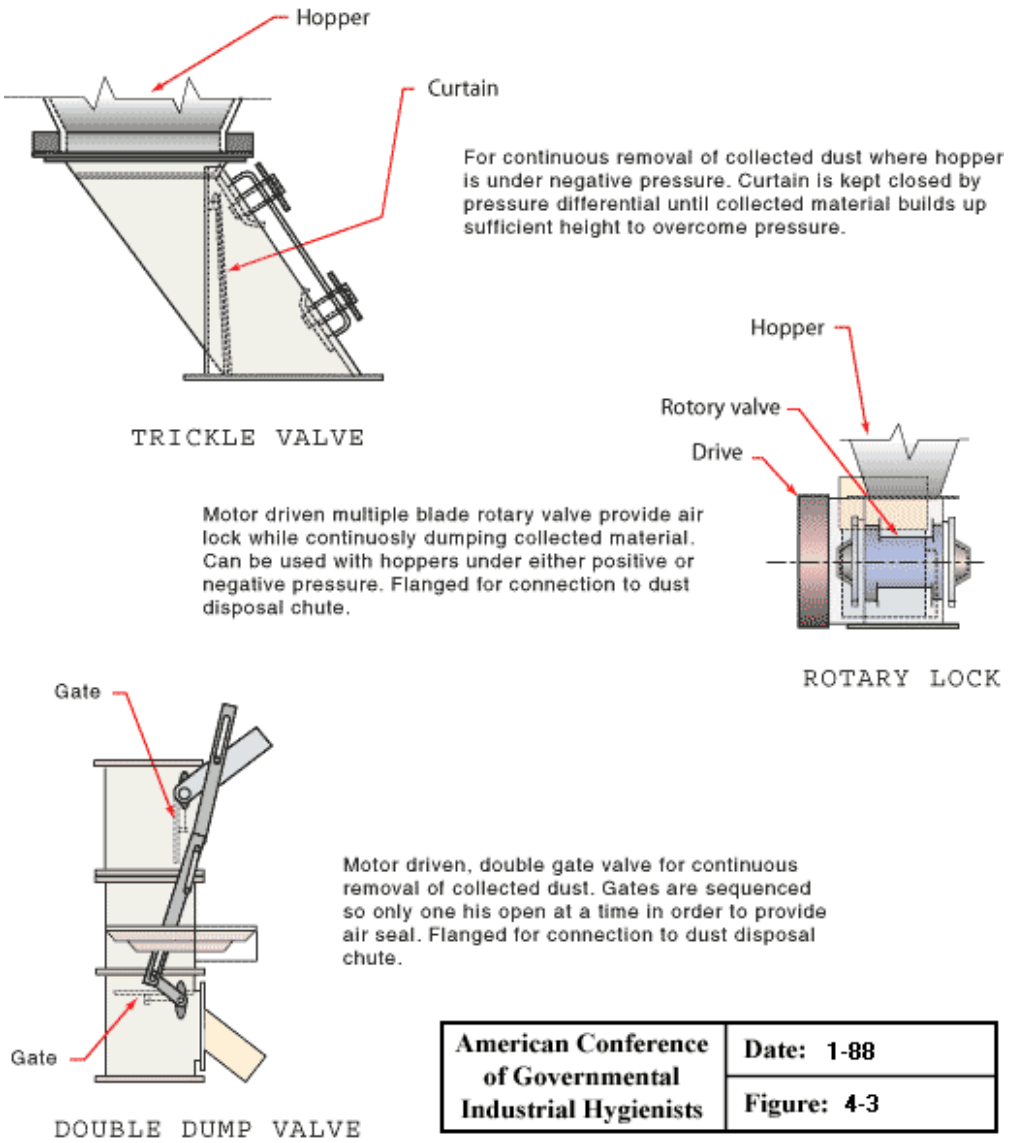

American Conference of Governmental Industrial Hygienists	Date: 1-88
	Figure: 4-3

From American Conference of Governmental Industrial Hygienists (ACGIH®), Figure 4-3, *Industrial Ventilation : A Manual of Recommended Practice*, 23rd Edition. Copyright 1998. Reprinted with permission.

Image of dry type dust collectors discharge valves

Movable Exhaust Hoods

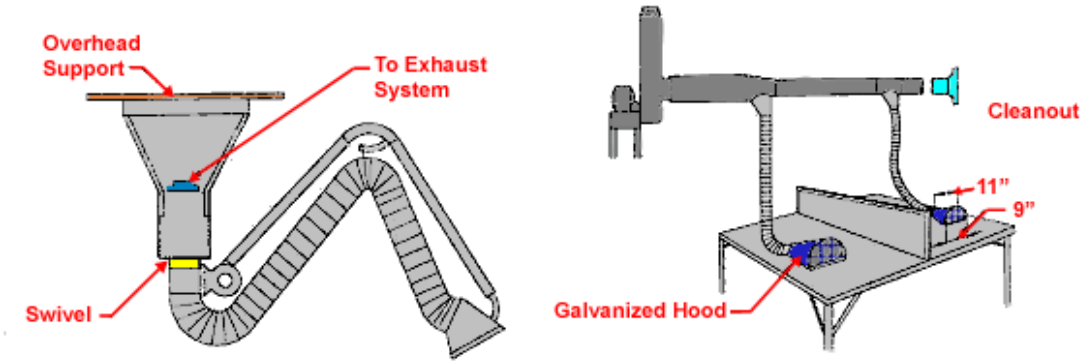

FLEXIBLE EXHAUST CONNECTIONS

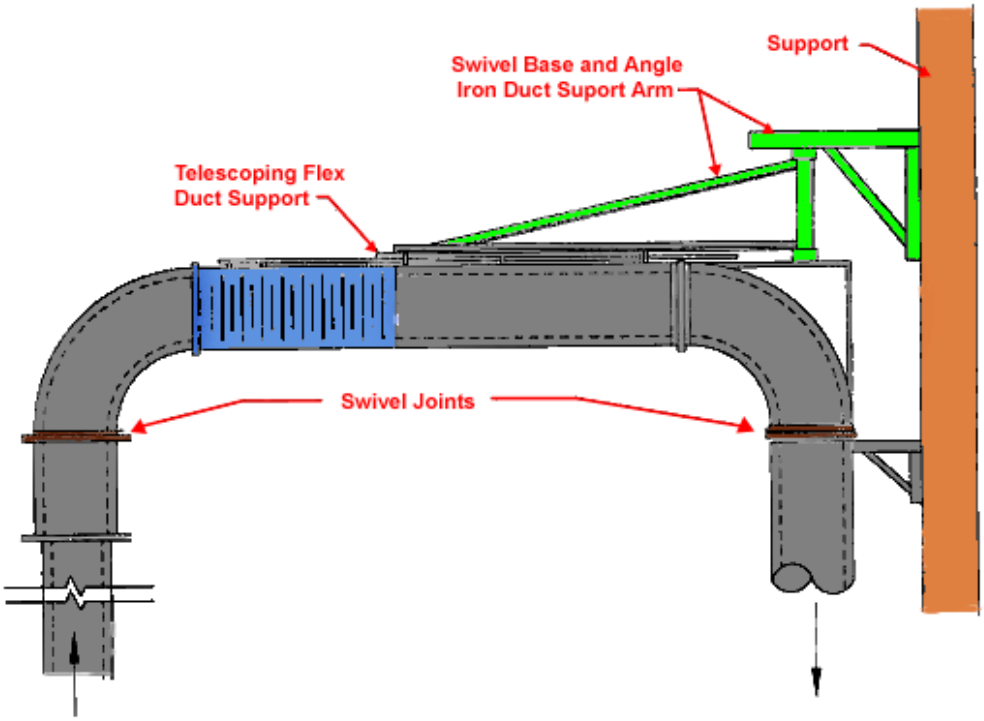

American Conference of Governmental Industrial Hygienists	Date: 02-91
	Figure: VS-65-01

From American Conference of Governmental Industrial Hygienists (ACGIH®), Figure VS-65-01, *Industrial Ventilation : A Manual of Recommended Practice*, 23rd Edition. Copyright 1988. Reprinted with permission.

Image of moveable exhaust hood diagram

Workbench

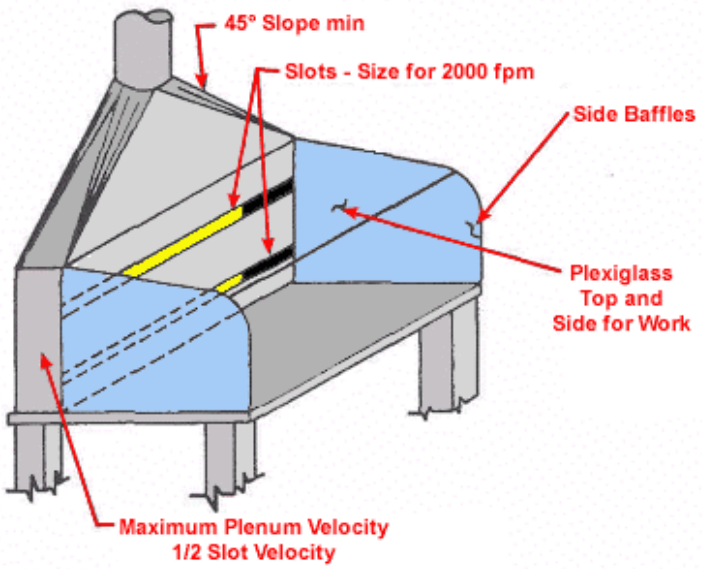

Design Criteria

- Q = 350 cfm/lineal ft of hood
- Hood length = required working space
- Bench width = 24" maximum
- Duct velocity ≥ 4,200 - 4500 fpm
- $h_e = 1.78\ VP_{slot} + 0.25\ VP_{duct}$

Image of workbench diagram

Typical System
Low Volume - High Velocity

	cfm	I.D. Plastic Hose Size (inches)
Disk sanders 3–9 inch diam.	60–175	1–1.5
Vibratory pad sander – 4"x9"	100	1.25
Router, 1/8"–1"	80–100	1–1.25
Belt sander 3"–4000 fpm	70	1
Pneumatic chisel	60	1
Radial wheel grinder	70	1
Surface die grinder, 1/4"	60	1
Cone wheel grinder	90	1.25
Cup stone grinder, 4"	100	1.25
Cup type brush, 6"	150	1.5
Radial wire brush, 6"	90	1.25
Hand wire brush 3" x 7"	60	1
Rip out knife	175	1.5
Rip out cast cutter	150	1.5
Saber saw	120	1.5
Swing frame grinder 2" x 18"	380	2.5
Saw abrasive 3"	100	1.25

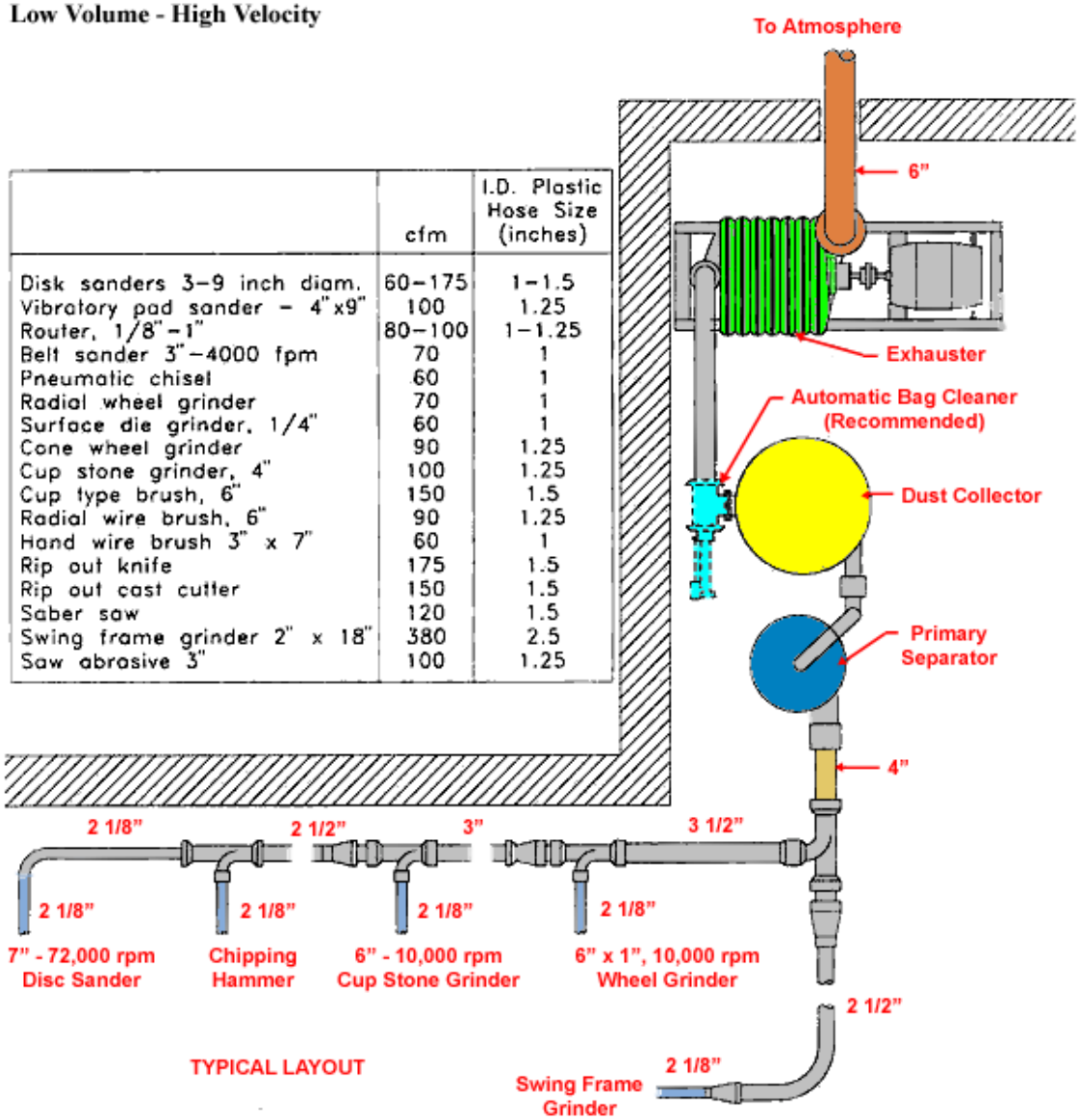

TYPICAL LAYOUT

American Conference of Governmental Industrial Hygienists	Date: 10 - 90
	Figure: VS - 40 - 20

System Notes

Bell and socket, smooth - flow type tubing and fittings should be used throughout the system.

When system is used for vacuum cleaning of abrasive materials. Schedule No140 pipe and cast iron drainage fittings, or heavier, should be used in place of tubing.

From American Conference of Governmental Industrial Hygienists (ACGIH®), Figure VS-40-20, *Industrial Ventilation : A Manual of Recommended Practice*, 23rd Edition. Copyright 1988. Reprinted with permission.

Image of typical system, low volume - high velocity

Hood for Cup Type Surface Grinder and Wire Brushes

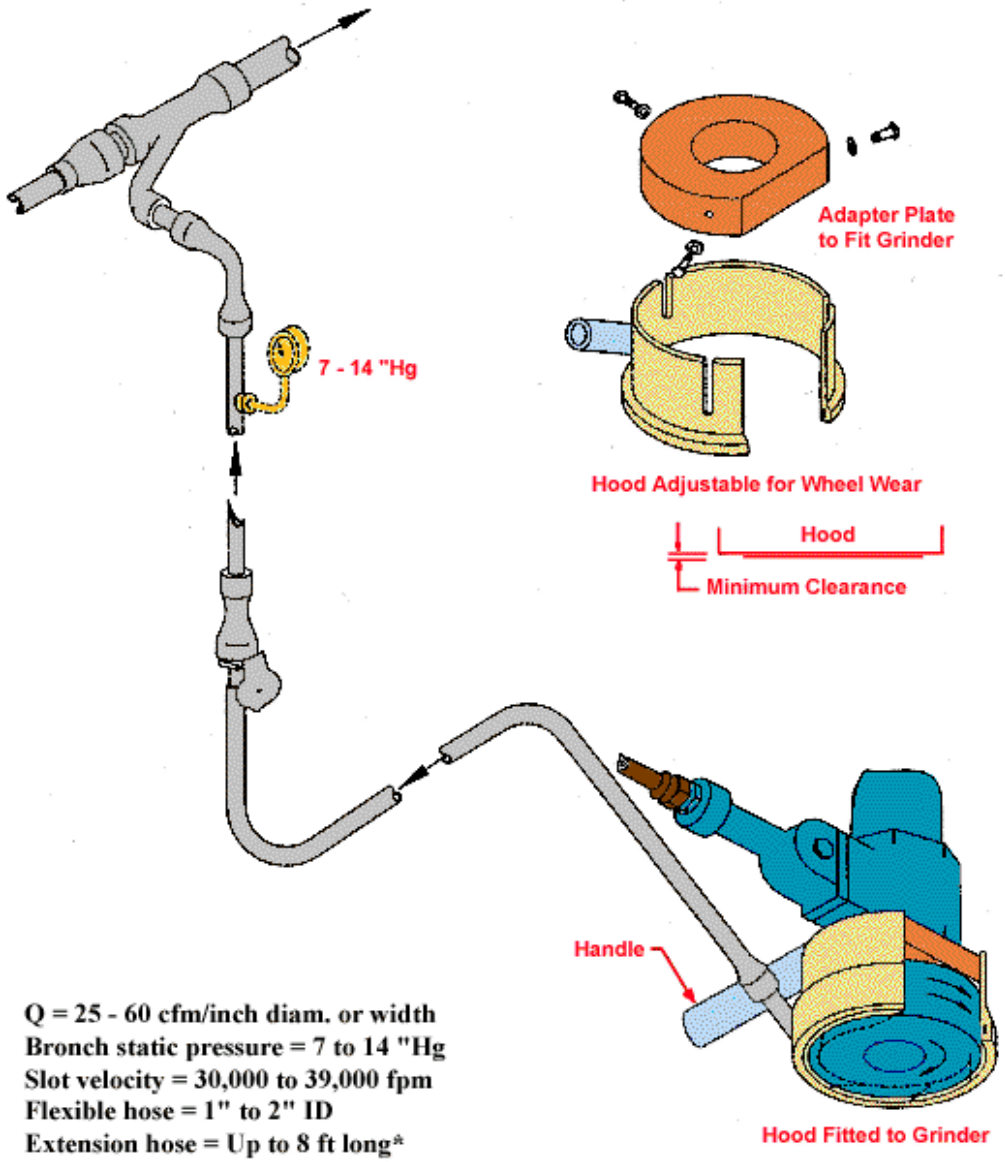

Q = 25 - 60 cfm/inch diam. or width
Bronch static pressure = 7 to 14 "Hg
Slot velocity = 30,000 to 39,000 fpm
Flexible hose = 1" to 2" ID
Extension hose = Up to 8 ft long*
Peripheral speed = 6,000 to 12,000 linear fpm

***Hose lengths may be extended up to a maximum of 50 ft by using larger sizes between the tool hose and the tubing system.**

American Conference of Governmental Industrial Hygienists	
Date: 10-90	Figure VS-40-02

Image of surface grinder and wire brush hood diagram

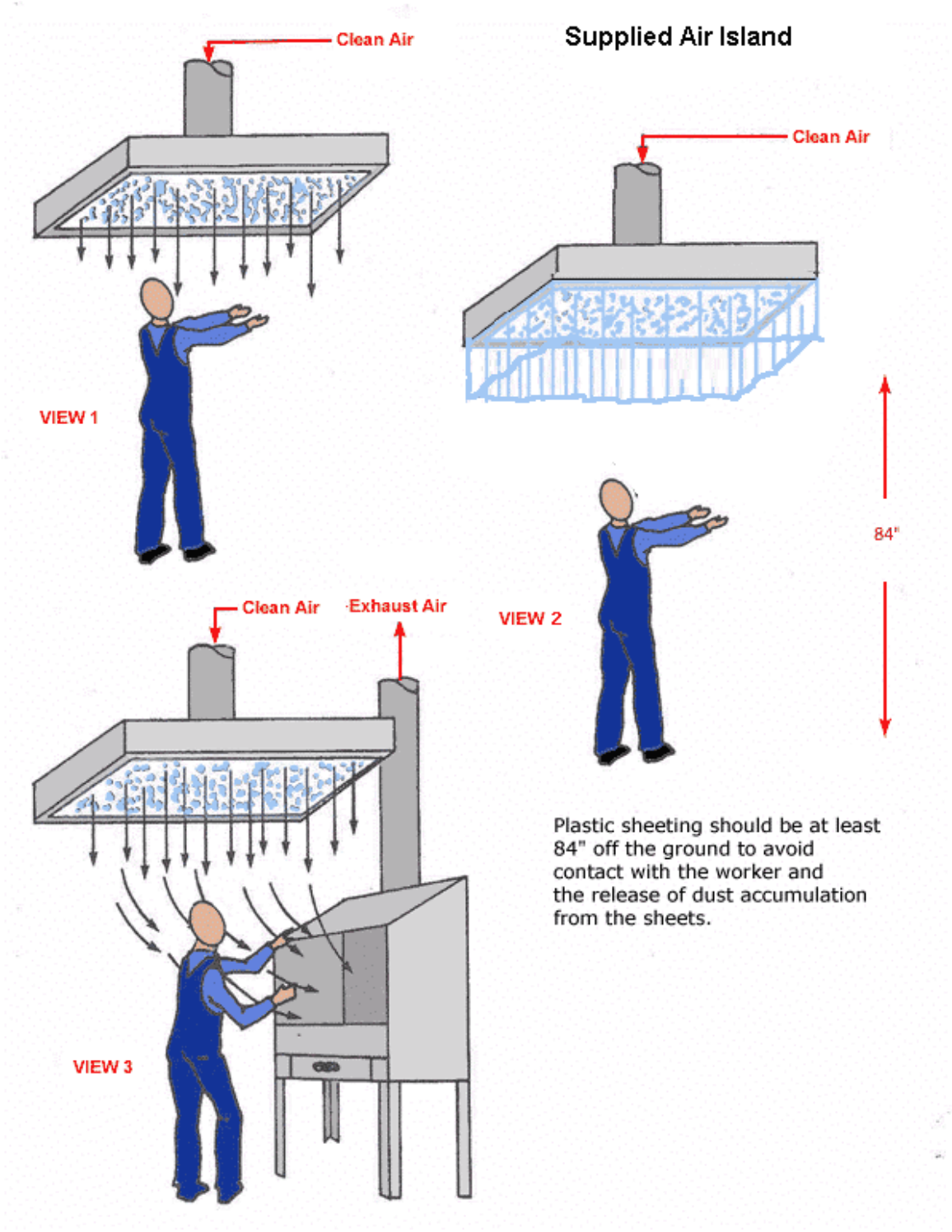

Image of supplied air island diagram

Portable Tool Exhaust
(High Velocity/Low Volume)

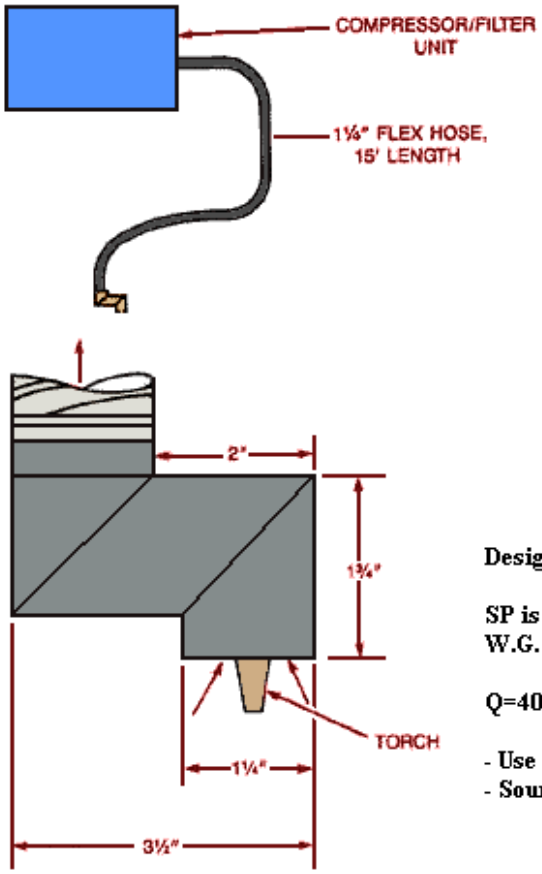

Design Criteria:

SP is greater than or equal to 72" W.G. (inlet)

Q=40 cfm

- Use steel mold
- Source must be within 1" of hood

Image of post burning, portable tool exhaust

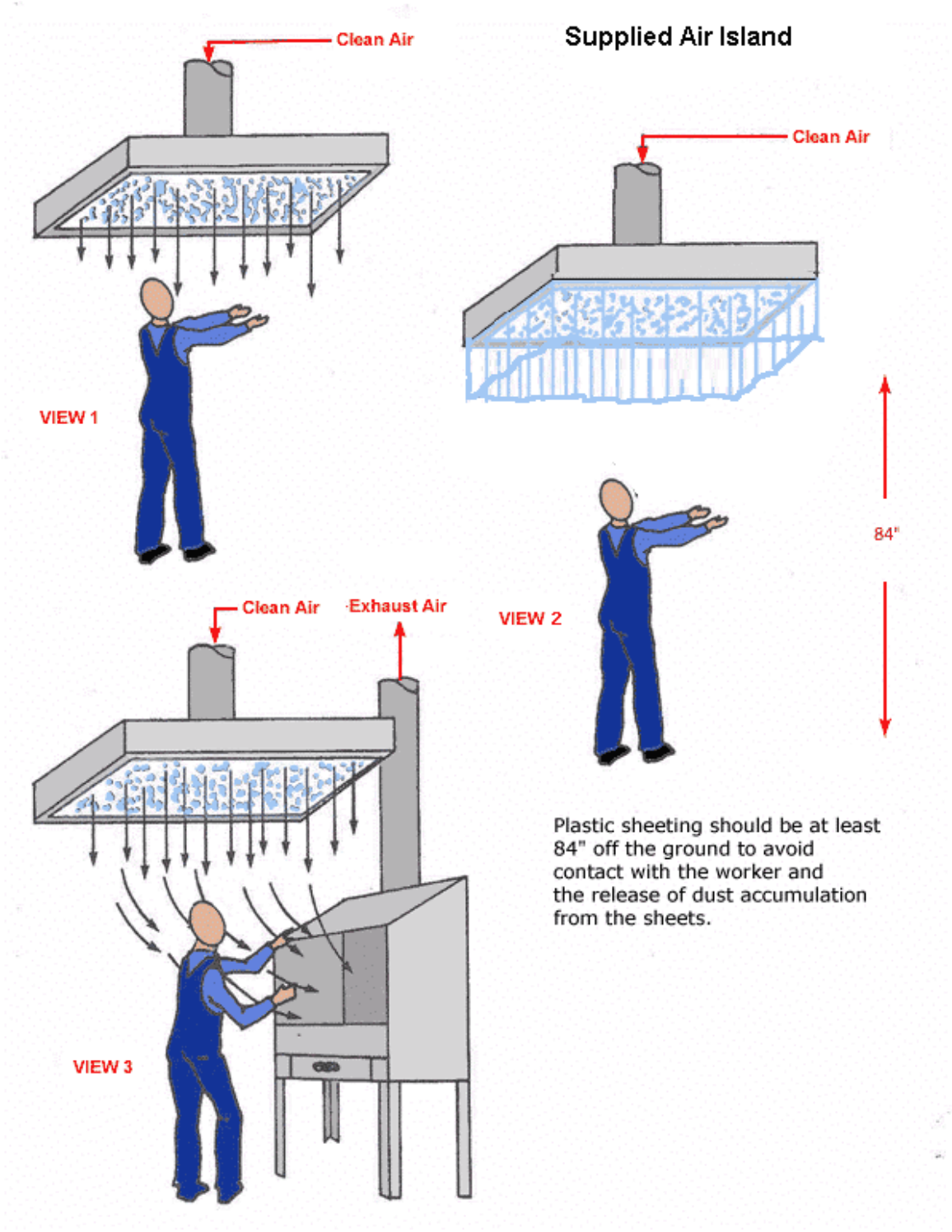

Image of supplied air island diagram

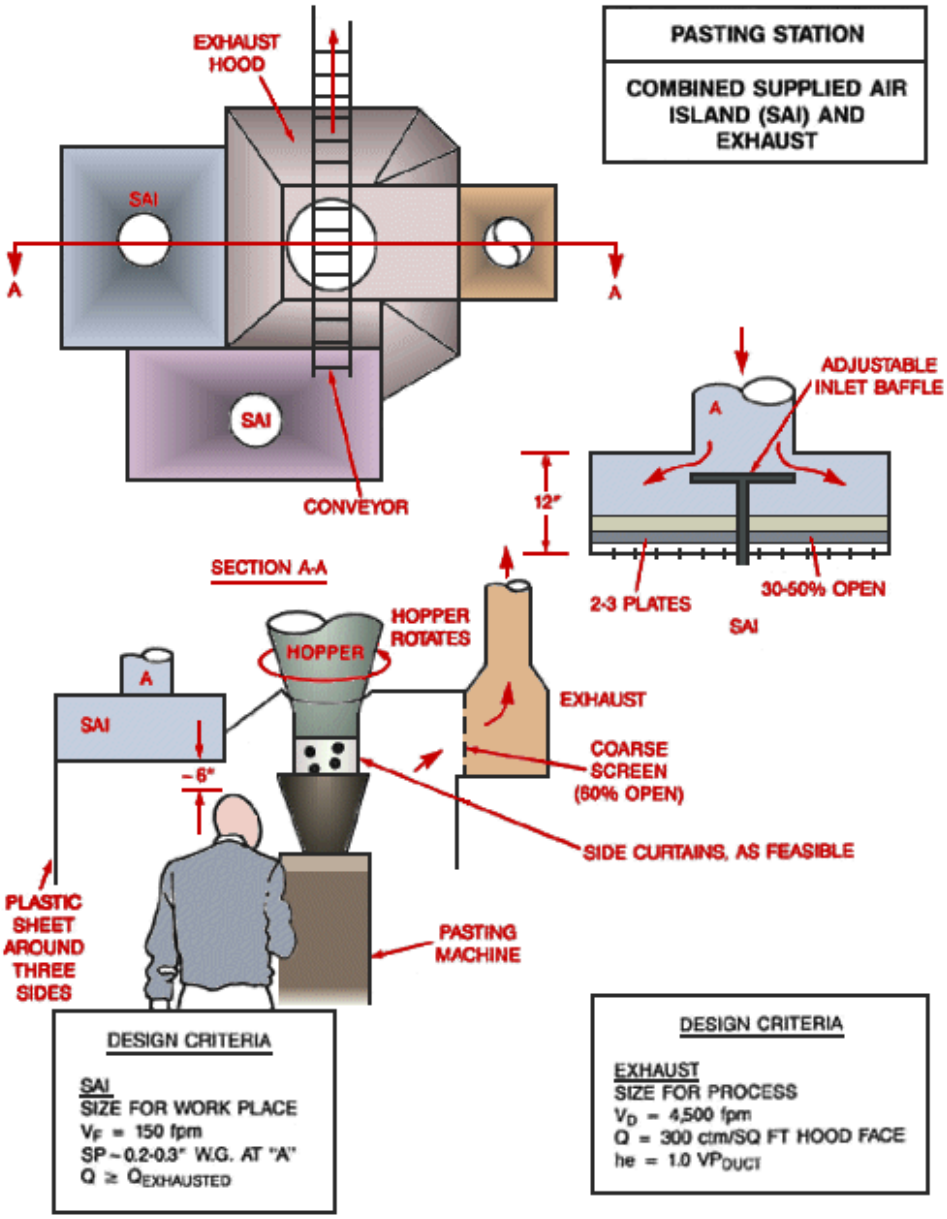

Image of pasting station, combined supplied air and exhaust diagram

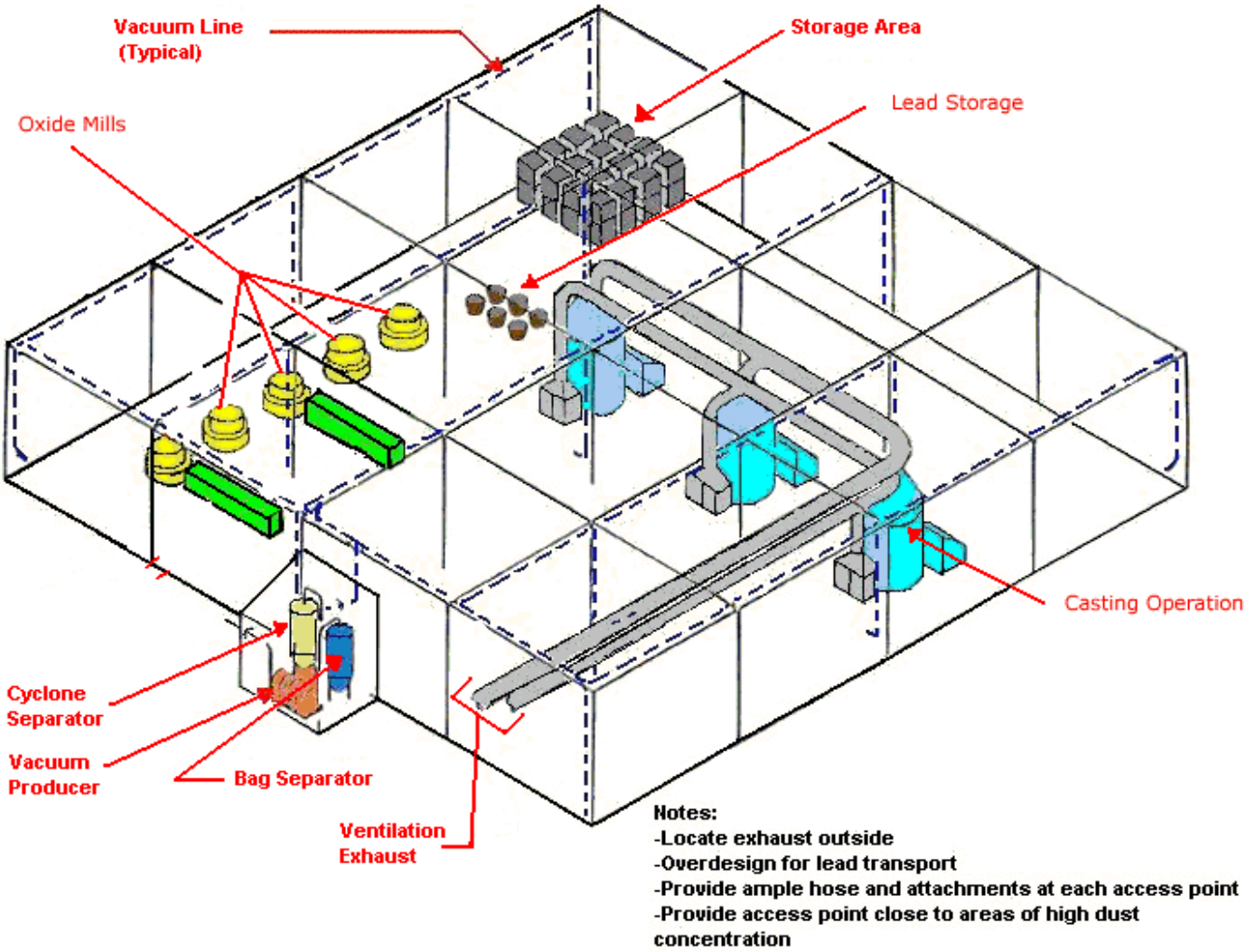

Image of central vacuum system diagram

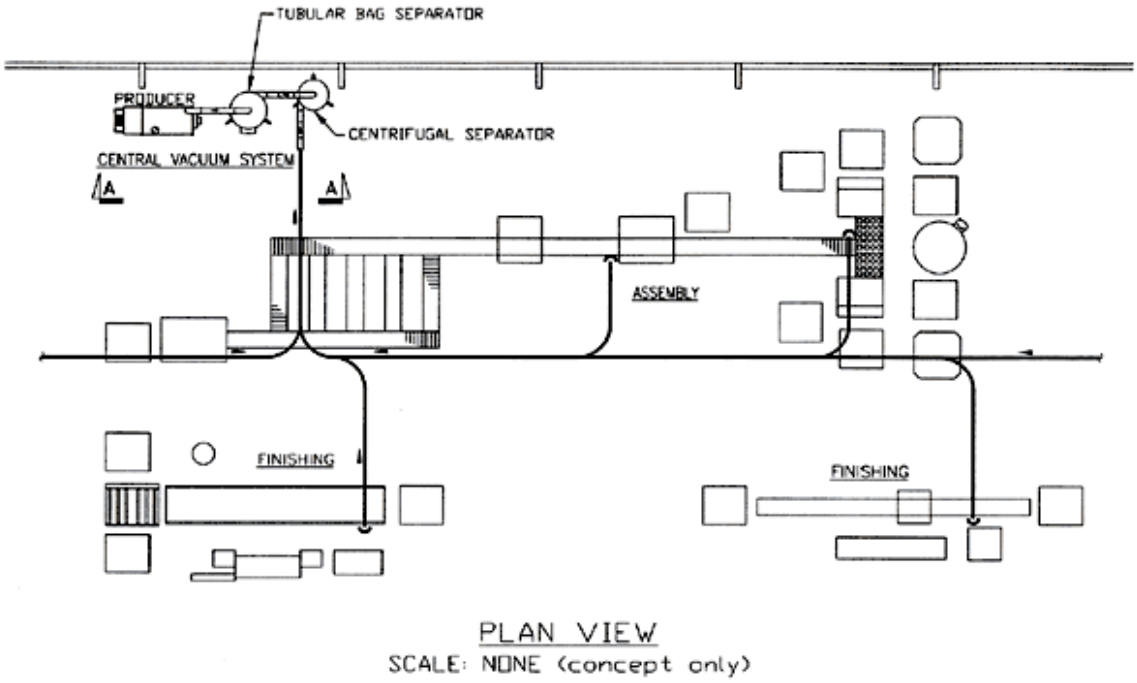

Plan view of central vacuum system

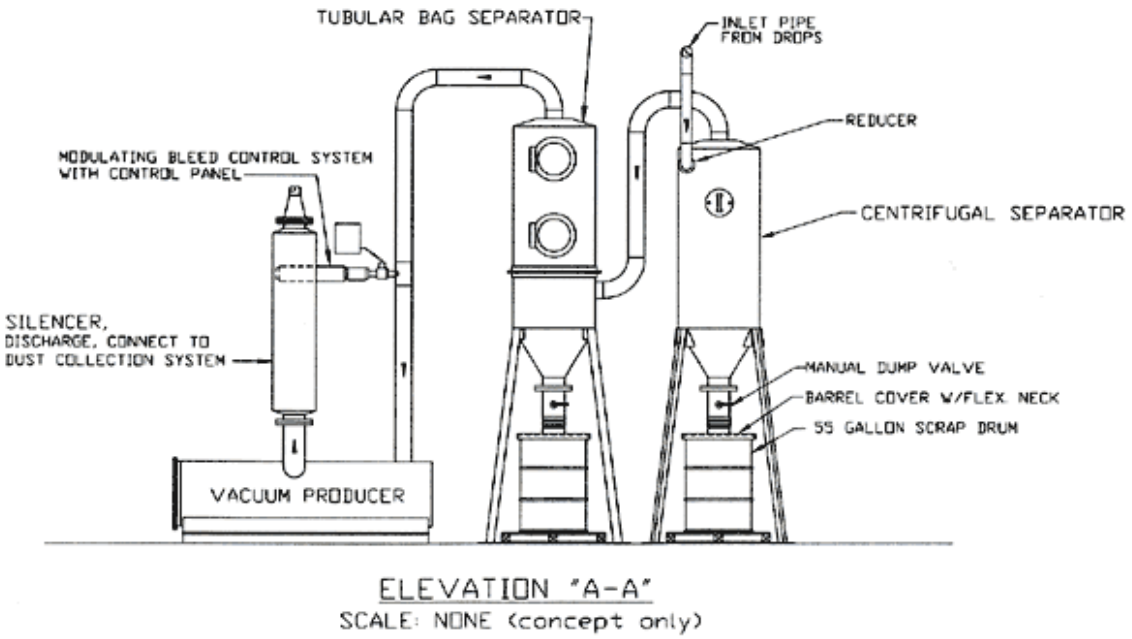

Elevation view of central vacuum system

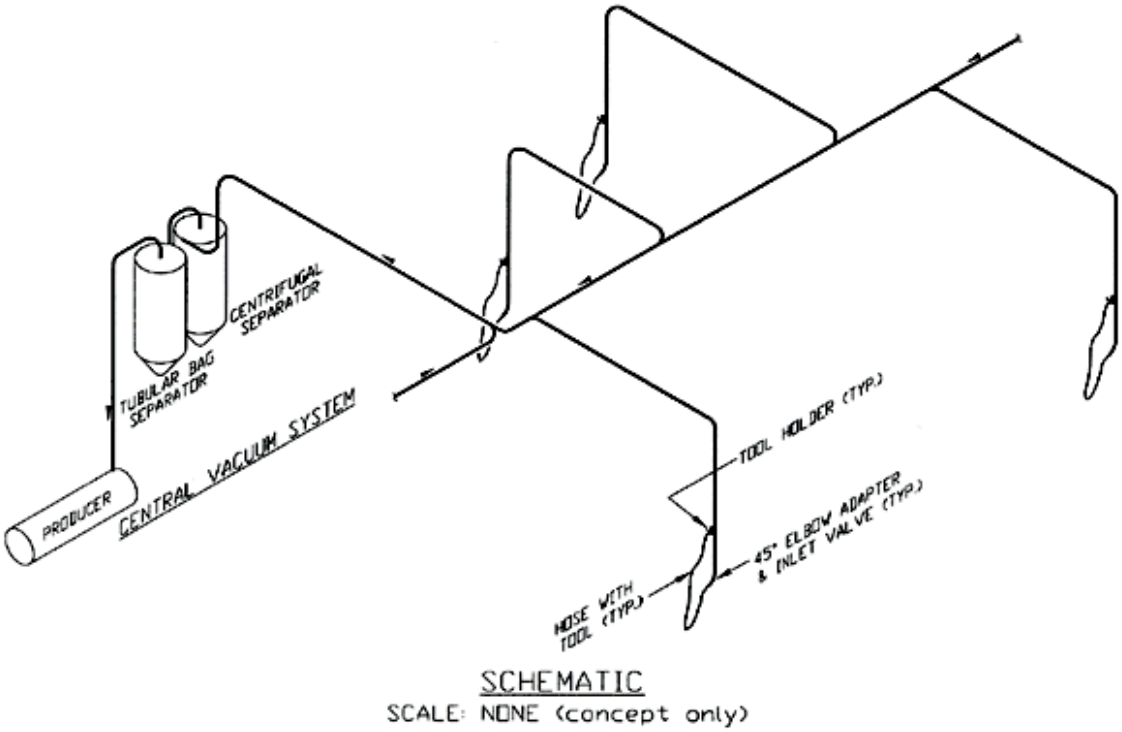

Schematic view of central vacuum system

Boot Wash Station

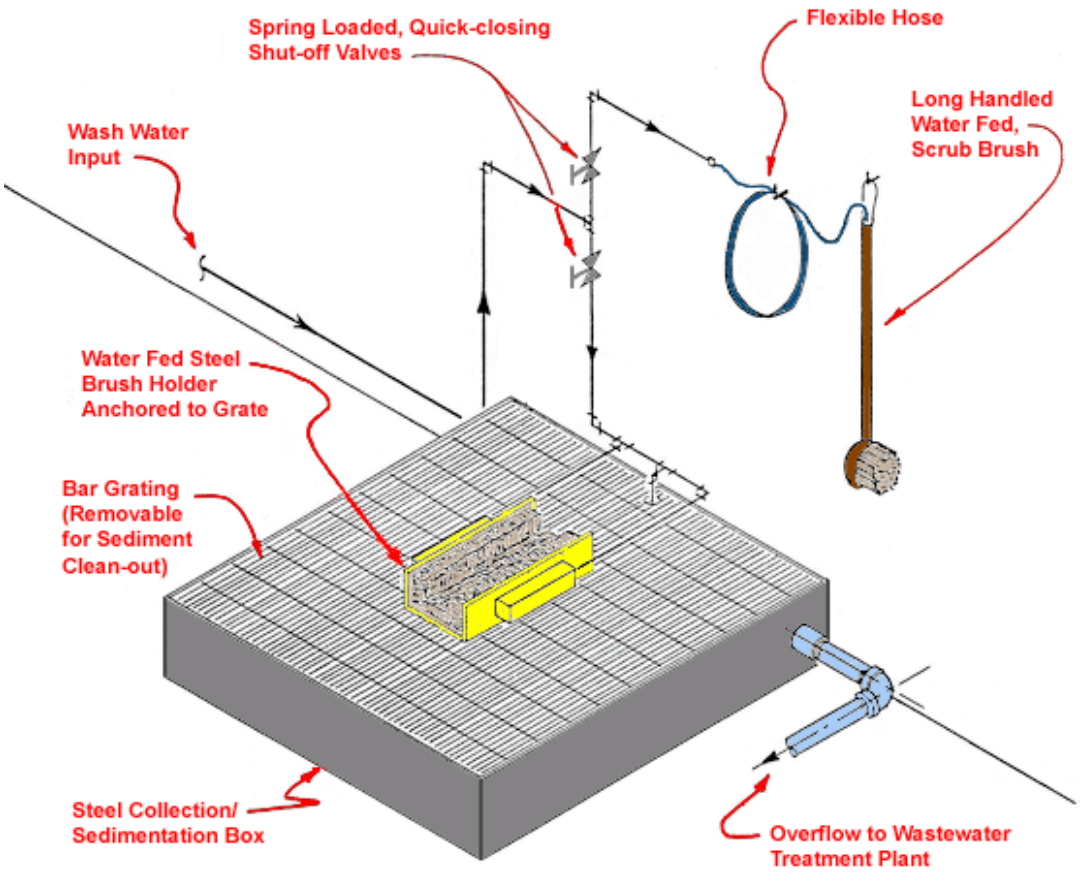

Image of boot wash station diagram

Shoe Cleaning Machine

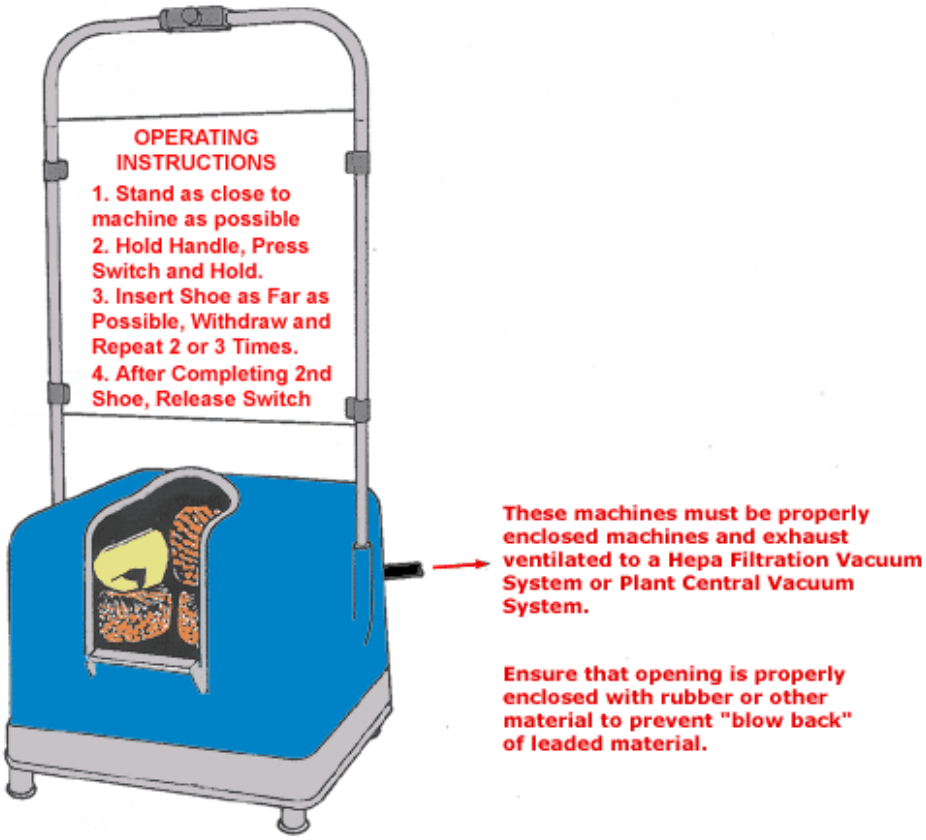

Image of shoe cleaning machine

Clothes Cleaning Air Shower

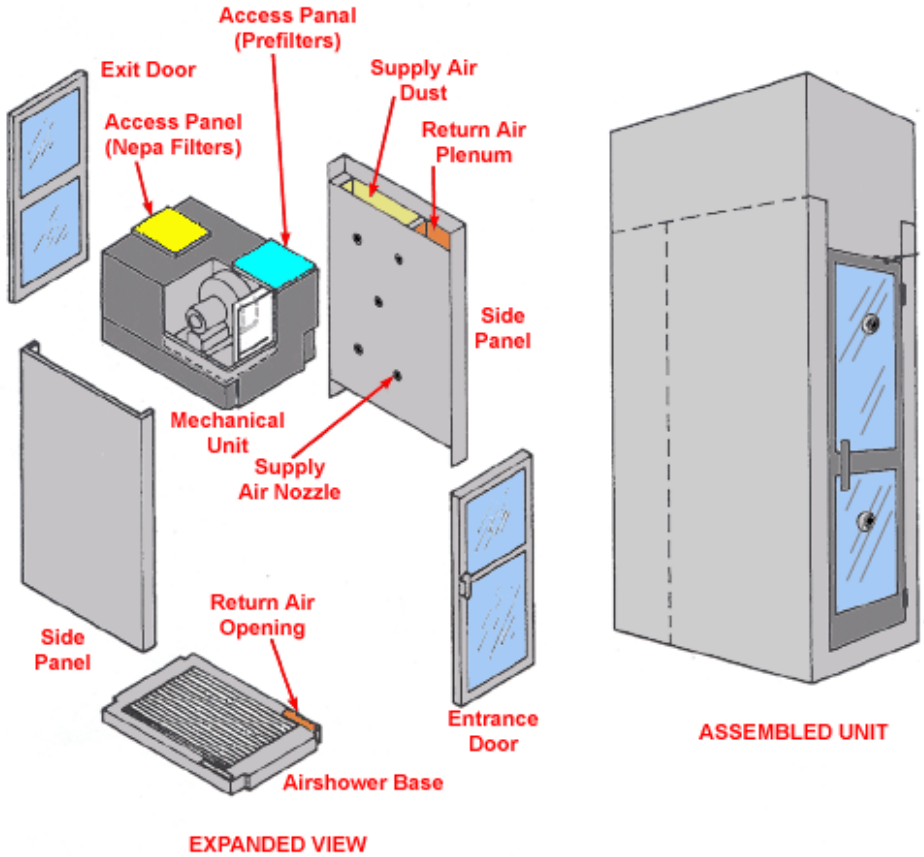

Design Characteristics

- Check with supplier.

Application Tips

- Install at entrance to clean-rooms, lunchroom, etc.
- Allow time for full use by employees.
- Provide daily cleaning and maintenance.

Image of clothes cleaning air shower diagram

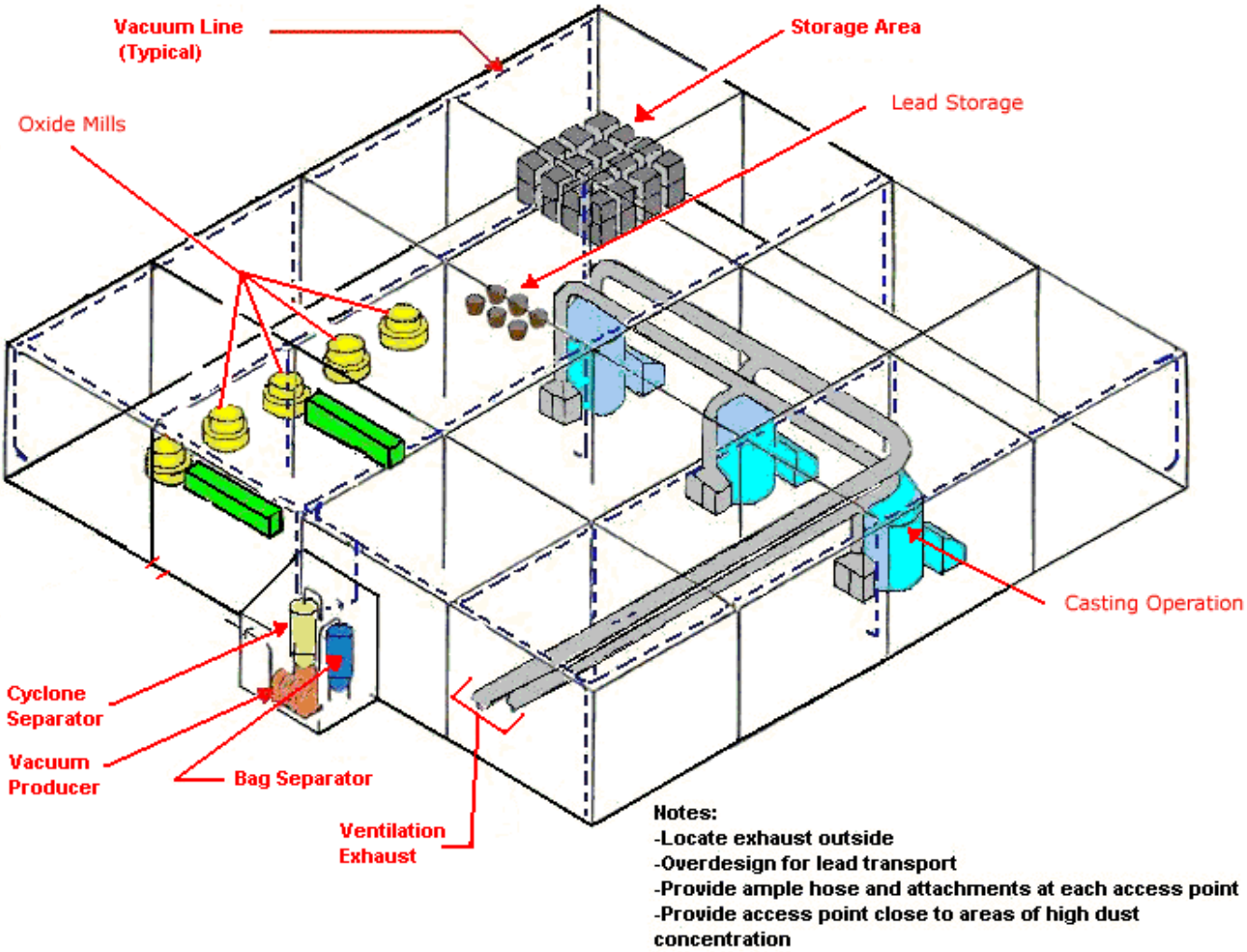

Image of central vacuum system diagram

Mobile Vacuum

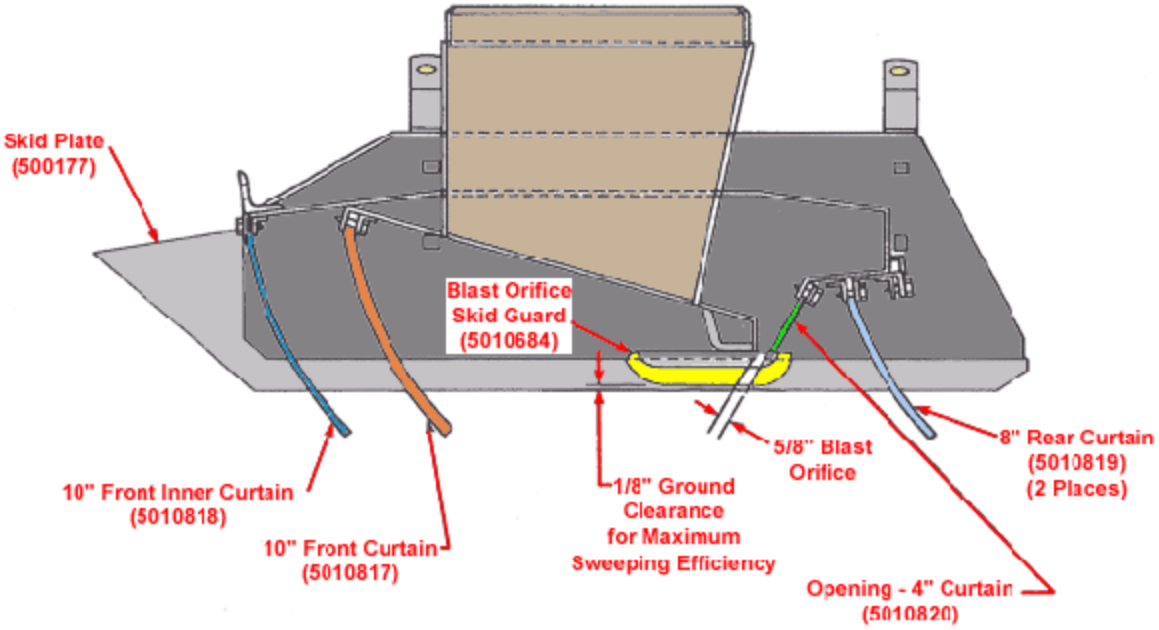

CROSS SECTION

NOTE: Suction Baffle
(5010832) Not Shown

Image of vacuum truck diagram

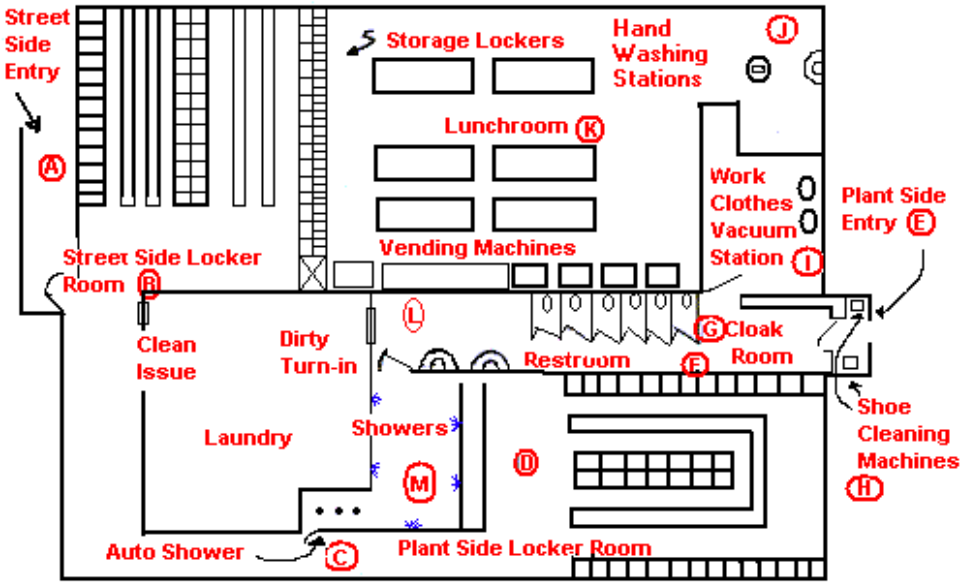

Facility Function / Description

1. The facility can be entered from the street at only one point. (A)
2. Street clothes are removed and clean work clothes, hardhat, and respirator are issued and donned in the street side locker room. (B)
3. The employee passes through a one-way turnstile in order to get to the plant-side locker room. (C)
4. The employee dons work boots and other safety gear in the plant-side locker room where they are stored. (D)
5. There is only one entry to the plant. (E)
6. The restroom just inside the cloak room is readily accessible during working hours. (F)
7. The cloak room provides a place to store coats, hardhats, gloves and respirators during break periods. (G)
8. During lunch break the employee first cleans his boots at the shoe cleaning machines (H), leaves coat and equipment in the cloak room (G), vacuums off his clothes at the vacuum stations (I), proceeds to the hand washing station where he thoroughly washes his hands (J), and finally enters the lunch room. (K)
9. At the end of the shift the procedure is as follows: the employee cleans shoes (H), removes contaminated clothing in the plant side locker room (D), stores boots, etc. in plant-side lockers, turns in dirty work clothes, hardhat and respirator to laundry (L), and proceeds to the showers. (M) He then must pass through an automatic shower (N) to return to the street-side locker room (B), where he dresses and leaves the faculty. (A)

Image of hygiene facility diagram

Clothes Cleaning Air Shower

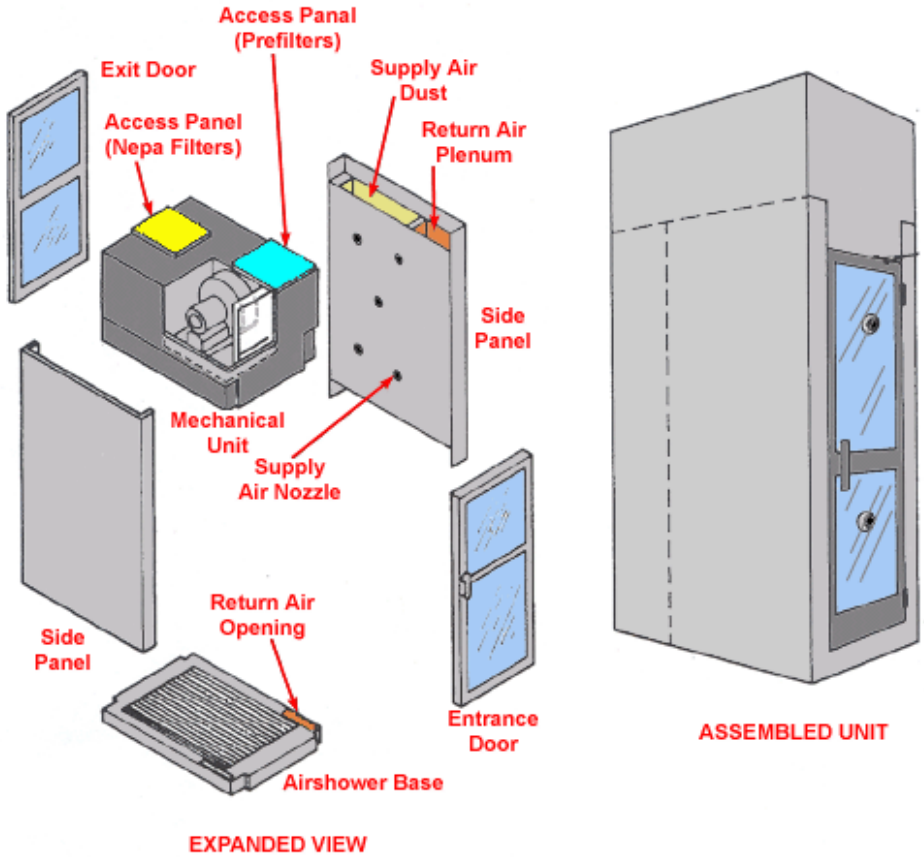

Design Characteristics

- Check with supplier.

Application Tips

- Install at entrance to clean-rooms, lunchroom, etc.
- Allow time for full use by employees.
- Provide daily cleaning and maintenance.

Image of clothes cleaning air shower diagram

Lead Battery Manufacturing

Engineering Controls > Supplied Air Island and Clean Air Rooms

There are two types of clean air systems that can be used for battery manufacturing operations:

1. Laminar Flow (Supplied-Air) Island Systems
2. Clean Air Room

Both systems:

- Protect the worker from exposure to contaminated background air.
- Help propel dust produced at the workstation away from the operator's breathing zone.

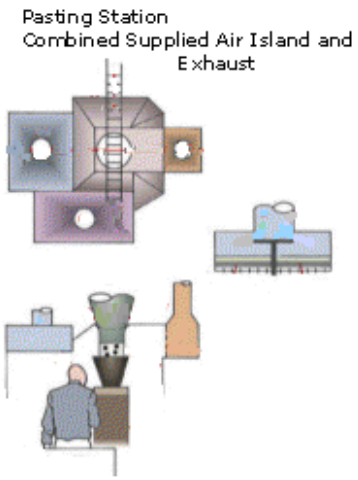

View larger image of fixed supplied air island diagram

Laminar Flow (Supplied-Air) Island Systems

Laminar flow (supplied-air) islands (SAI) provide a zone of clean air at a workstation. The supplied air may come from outside the plant or the air may be filtered plant air.

Laminar flow (supplied-air) islands are especially useful in limiting lead exposure when:

- An employee remains in a stationary position at the workstation for long periods of time. The SAI provides an envelope of clean air to a worker. The clean air flows down over the worker which normally keeps factory air from entering the clean air core.
- A supply of fresh, clean air is available. Note: Outside air may not require cleaning and costs will be lower. If no outside source of clean air is available, intake air should be filtered.
- The air is tempered. Employees will not remain in an environment that is too hot or too cold. Note: If the air is not tempered employees will block off the air flow with cardboard or other material in the winter or try to increase the flow for cooling in the summer which could result in higher exposures.

Laminar Flow (Supplied Air) Islands are not always necessary if adequate capture velocity is provided to control airborne lead.

Design Specifications

The laminar flow (supplied-air) island (SAI) should be designed to provide a laminar flow of

Safety and Health Topics Page
Oxide and Grid Processing
Plate Processing
Battery Assembly
Battery Repair and Reclaim
Environmental Controls
Maintenance
Engineering Controls
Local Exhaust Ventilation Diagrams
Laminar Flow (Supplied Air) Islands
Central Vacuum System
OSHA Lead Requirements...
Source Identification Protocol

fresh air through the employee's breathing zone at a low enough velocity so that additional airborne lead dust is not generated through reentrainment.

View larger image of supplied air island

- The SAI height is typically 80 inches from the floor but is often restricted by overhead clearance limits and other equipment installed in the area. If curtains are used to extend the length of the SAI they should not extend lower than 84 inches from the floor level to prevent workers from disturbing dust collected on the curtains.

- The air flow is designed so that the velocity measured at the employee's breathing zone is 100-150 feet per minute. Higher velocity may stir up lead dust.

- SAIs can be used in conjunction with exhaust-ventilated work benches. In this case, the air should be balanced so that make-up air is provided equal to the amount of the exhaust air.

back to top

Clean Air Room

Perform the following to ensure clean air rooms are free of lead contaminants:

- Vacuum enclosures and scrub them with soap and water so lead dust does not collect on flat surfaces.

- Ensure that the structural integrity of all enclosures are intact and under positive pressure at all times.

- Develop a preventive maintenance checklist that includes schedules for:
  - Replacing ventilation system filters.
  - Replacing ventilation system hoses, clamps, and blower internal parts.
  - Replacing window and door moldings.
  - Checking and replacing air shower ventilation systems, including automatic doors, blower, nozzles, and lighting.
  - Monitoring intake and exhaust airflow to ensure that the rooms are under positive pressure at all times.

Design Specifications

Using clean air rooms can effectively lower lead exposure. They can be used for oxide mill or paste mix operators. Some clean air rooms are used as lead-free environments where employees can remove their respirators.

- These rooms need to have positive pressure, be tempered, and have a filtered air system with a HEPA filter designed to remove 99.97 percent of lead dust greater than 0.3 micron in diameter.

- An ante room should be included to give employees a place to remove their protective equipment without spreading contamination in the clean air rooms.

back to top

Lead Battery Manufacturing

Safety and Health Topics Page

Oxide and Grid Processing
Plate Processing
Battery Assembly
Battery Repair and Reclaim
Environmental Controls
Maintenance
Engineering Controls
Local Exhaust Ventilation Diagrams
Laminar Flow (Supplied Air) Islands
Central Vacuum System
OSHA Lead Requirements...
Source Identification Protocol

Engineering Controls > Central Vacuum System

A central vacuum system is used by plant personnel to remove lead oxide dust from their workstations. Tools can also be connected the system to capture dust at the source of generation for some operations, such as grinding.

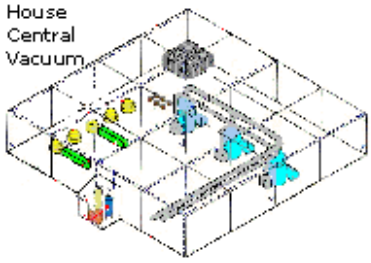

View larger image of central vacuum system diagram

Central Vacuum System

Design Specifications

Design of a central vacuum system depends on the number of active work points (hoses and tools) operating at the same time that is desired. Sometimes, the system would be very large and expensive if the number of active points is high. The size and cost of the system can be reduced by:

- Staggering the clean-up period.
- Minimizing the number of active stations used at any one time.

Manufacturers and vendors of the equipment will size the vacuum unit, filter or bag unit, centrifugal separator, and bleed control with a silencer to suit the final number of work points.

If a drawing or dimensional sketch is provided to the supplier, most suppliers will size the collection system, tubing, fittings, and headers, along with the type and number of fittings required to match the application.

The choice of the length and type of hose, along with the type of tools needed, depend on the workstation. Suppliers can provide listings of available accessories, shutoff valves, tools, and hoses.

To have an efficiently operating system, the installation of the equipment should conform to the supplier's instructions. All piping, work points, and valves should be properly supported.

Diagrams

- Central Vacuum System Diagram
- Plan view of central vacuum system
- Elevation view of central vacuum system
- Schematic view of central vacuum system

back to top