Lead Battery Manufacturing

Employees working in battery manufacturing plants may potentially be exposed to lead concentrations greater than recommended exposure limits.

Battery Manufacturing is the process of producing lead-acid batteries, commonly used in automobiles, fork trucks, material handling, and standby power applications.

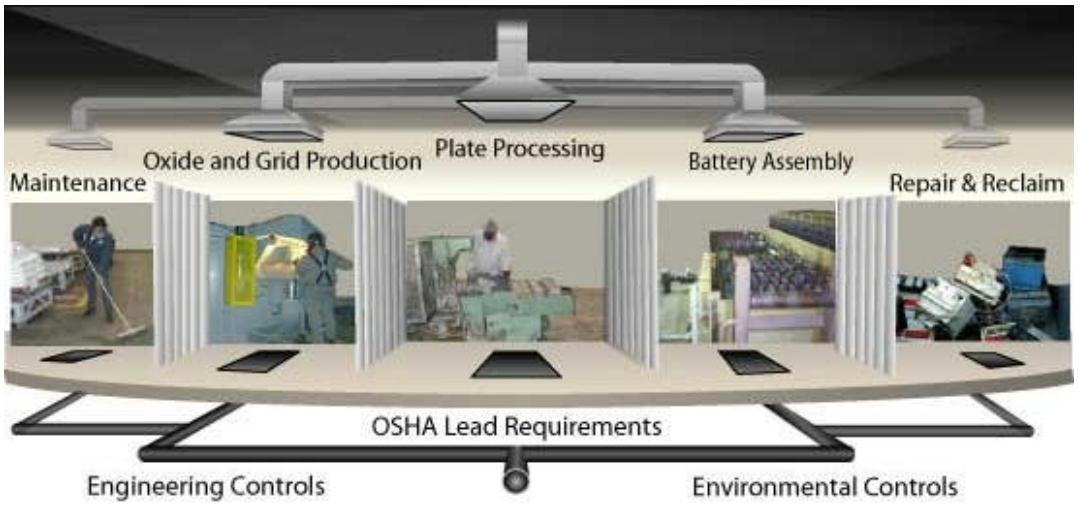

Oxide and Grid Production, Plate Processing, Battery Assembly, Battery Repair and Reclaim, Environmental Controls, and Maintenance are operations workers perform in battery manufacturing plants.

Information on Engineering Controls and OSHA Lead Requirements is provided to assist in compliance with the OSHA Lead Standard.

Respiratory protection and medical surveillance are not addressed in this eTool. However, they are essential for controlling lead exposure levels and preventing lead-related disease when engineering controls do not reduce airborne lead levels below the permissible exposure limit. Please refer to respiratory protection and medical surveillance for more information.

The OSHA Lead Standard requires the employer to reduce employee exposure to the lowest feasible level through the use of engineering and work practice controls [1910.1025(e)(1)]. The engineering and work practice controls addressed in this eTool have been shown to reduce employee exposure and are provided to assist employers and employees in complying with the OSHA Lead Standard. It is the employer's responsibility to evaluate the sources of exposure and the specific controls for operations that are necessary to comply with the Lead Standard.

Safety and Health Topics Page

Oxide and Grid Processing

Plate Processing

Battery Assembly

Battery Repair and Reclaim

Environmental Controls

Maintenance

Engineering Controls

OSHA Lead Requirements...

Source Identification Protocol

Disclaimer

eTools are "stand-alone", illustrated, Web-based training tools on occupational safety and health topics. As indicated in the disclaimer, eTools do not create new OSHA requirements.

Lead Battery Manufacturing

Oxide and Grid Processing

Lead oxide is made from refined lead. The oxide is then made into a paste by mixing it with water, acid, and other chemicals. In a process parallel to the production of paste, grids are cast from lead alloy. The paste and grids are later combined in the pasting process. See Plate Processing for more information.

- Oxide Production
- Oxide Receiving
- Oxide Conveyance and Classification
- Paste Mixing
- Grid Production and Parts Casting

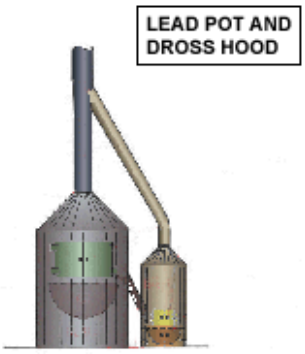

View larger diagram of lead pot and dross hood

Safety and Health Topics Page

Oxide and Grid Processing
- Oxide Production
- Oxide Receiving
- Oxide Conveyance and Classification
- Paste Mixing
- Grid Production and Parts Casting

Plate Processing

Battery Assembly

Battery Repair and Reclaim

Environmental Controls

Maintenance

Engineering Controls

OSHA Lead Requirements...

Source Identification Protocol

Lead Battery Manufacturing

Oxide and Grid Processing > Oxide Production

Lead oxide, which is used to create the paste used on the battery plates, is either produced by the Ball Mill Process or the Barton-Like Process. It may also be purchased from an oxide producer (see receiving). The major source of lead exposure in the oxide production process comes from leaking equipment and system upsets.

Furnace that melts lead for to the Barton Process

Oxide Production

Potential Sources of Exposure

- Lead dust can become airborne due to improper air flow or exhaust ventilation, which results in "puffing" of lead oxide at the mill inlet.
- Exposure may occur from handling lead pigs while loading the mill pots or the ball mill.
- Lead oxide dust may spill or leak from trunnion seals, bearing seals, conveying systems, and transfer points.
- Exposure to lead may occur when drossing the lead pots during the Barton process (Figure 1) and during maintenance operations that require entry into the pot for cleanout.
- Lead oxide may leak or spill during drive fitting and transfer operations.
- Lead exposure may occur while collecting and testing oxide samples.
- Operators may be exposed to lead oxide while cleaning the oxide production line.
- Exposure may be due to vehicular traffic in adjacent roadways stirring up oxide.

Figure 1
Drossing out the lead pot

Figure 2
Ensure that ventilation works

Safety and Health Topics Page

Oxide and Grid Processing
- Oxide Production
- Oxide Receiving
- Oxide Conveyance and Classification
- Paste Mixing
- Grid Production and Parts Casting

Plate Processing

Battery Assembly

Battery Repair and Reclaim

Environmental Controls

Maintenance

Engineering Controls

OSHA Lead Requirements...

Source Identification Protocol

Possible Engineering Controls

- Use local exhaust ventilation:
  - Install a hood enclosure for the lead melting pot.
    Gas fired lead pot, canopy hood
  - Install a hood enclosure on the dross pot or barrel.
  - Install tightly enclosed conveyer systems with ventilation at transfer stations (Figures 3 and 4).
  - Use exhaust ventilation at the sampling and process test stations (Figure 5).
  - Use exhaust ventilation around the agitator shaft or air intake of the Barton pot.
  - Place a hooded duct in close proximity to the air intake to contain the volume of a "puff" in order to prevent it from entering the workplace.
  - Place local exhaust ventilation around dust generation points.
  - Ensure that drum filling operations are ventilated and enclosed.
    Oxide drum filling, local exhaust ventilation
    Oxide barrel filling, local exhaust ventilation
    Gas fired lead pot, canopy hood
  - Add a pressure relief valve, vented through a filtering system, to the screw conveyer to vent dust generated during the transfer operation.
- Isolate the process:
  - Separate the operation from the rest of the plant and keep it under negative pressure.
  - Build a positive pressure control room for the operator.
- Use pneumatic conveyers for handling barrels rather than handling them manually.
- Use automatic sampling instead of manual sampling.
- Install a vertical classifier ahead of the

Figure 3
Enclosed screw conveyor

Figure 4
Inspect leaking equipment

Figure 5
Work station for analyzing oxide samples

Figure 6
Vacuum frequently

normal classifier and oxide collection equipment to reduce "puffing" of the Barton Process equipment.

- Protect or insulate storage tanks from the weather to prevent water condensation on the inside walls.
- Mechanize the system of feeding lead pots or mills.

Figure 7
Ball mill

Possible Work Practice Controls

- Notify supervisor of oxide leaks and perform temporary repairs immediately.
- Fill drums inside ventilated hoods or enclosures.
- Wipe down the exterior of drums before transferring them to storage or to other areas.

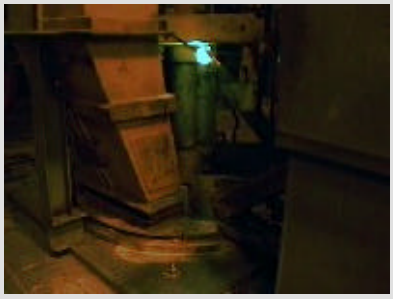

Figure 8
Barton pot

- Cap the drums before vacuuming.
- Prevent lead buildup on the inside perimeter of the pot because it can slough off and cause puffing.
- Provide adequate PPE, a change of clothes, and shower rooms (see OSHA Lead Requirements for PPE, Housekeeping, and Hygiene Facilities).
- Maintenance:
  - Ensure that ventilation is working properly (Figure 2).
  - Develop a written schedule of inspections for oxide mill operators.
    - The schedule should include weekly inspections of equipment such as overhead ducts and rotary valves.
- Housekeeping:
  - Vacuum all oxide spills immediately with a central vacuum system or a HEPA vacuum.
  - Vacuum equipment surfaces and floors whenever possible during each shift (Figure 6).
  - Use dust suppression compounds in place of water for dust suppression in the mill area to prevent the possibility of oxide fires and the mixing of water and molten lead.
  - Periodically shut down the plant to perform a thorough cleanup of settled dust.

back to top

Lead Battery Manufacturing

Oxide and Grid Processing > Oxide Receiving

Oxide is delivered to plants in "pod" cars, which loads the material into storage by pneumatic conveying (blowing) it into storage tanks. All lead oxide storage systems have the potential for leaking, particularly around seals and sampling points.

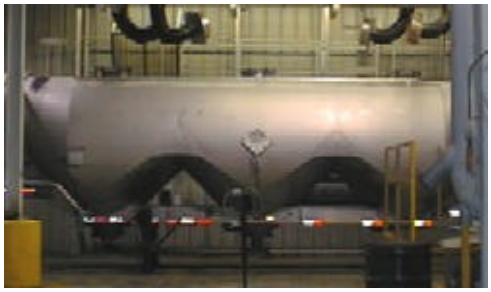

"Pod" car delivering oxide to a battery manufacturing plant

Oxide Receiving

Potential Sources of Exposure

- Leaking conveying equipment, particularly around flanges, seals, and transfer points.

Possible Engineering and Work Practice Controls

- Provide HEPA filtered bin vents correctly sized to handle conveying airflow or connect to central bag house.
- Develop a reliable preventative maintenance program to ensure the integrity of the system.

back to top

Safety and Health Topics Page

Oxide and Grid Processing
- Oxide Production
- Oxide Receiving
- Oxide Conveyance and Classification
- Paste Mixing
- Grid Production and Parts Casting

Plate Processing

Battery Assembly

Battery Repair and Reclaim

Environmental Controls

Maintenance

Engineering Controls

OSHA Lead Requirements...

Source Identification Protocol

Lead Battery Manufacturing

Oxide and Grid Processing > Oxide Conveyance and Classification

Certain material transporting operations call for mechanical conveyance. Common conveyance methods used in battery manufacturing facilities include:

- Pneumatic Conveyors
- Belt Conveyors
- Drag Link Conveyors
- Screw Conveyors

Classification separates the oxide particles by size, allowing only particles within the desired size range to the paste mixing operation.

- Classification

Toxic Material Belt Conveying Head Pulley

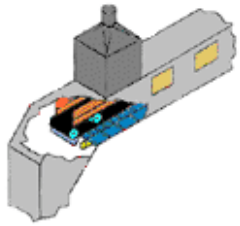

View larger image of belt conveying head pulley diagram

Pneumatic Conveyors

Pneumatic conveying systems use air to transfer lead oxide from one point to another via pipes.

Potential Sources of Exposure

- Leaking equipment.
- Damaged bags in bin vent or bag house.

Possible Engineering and Work Practice Controls

- Repair leaks and replace bags immediately.
- Use self-adhesive neoprene gaskets at all joints to provide a dust-tight seal.
  - Dust Control Handbook: Pneumatic Conveyors. OSHA and the Bureau of Mines, U.S. Department of the Interior (1987, February), 20 pages. This handbook consolidates information developed by industry and government laboratories on dust control engineering techniques for metal and nonmetal mineral processing.

back to top

Belt Conveyors

Belt conveying systems use belts to transport lead oxide material.

Potential Source of Exposure

- Lead dust may be emitted from open

Safety and Health Topics Page

Oxide and Grid Processing
- Oxide Production
- Oxide Receiving
- Oxide Conveyance and Classification
- Paste Mixing
- Grid Production and Parts Casting

Plate Processing

Battery Assembly

Battery Repair and Reclaim

Environmental Controls

Maintenance

Engineering Controls

OSHA Lead Requirements...

Source Identification Protocol

conveyor systems:

- At the receiving end.
- At the discharge end.
- At the underside of conveyor.
- From spillage along the conveyor belt.

View larger image of belt conveying head pulley diagram

Possible Engineering and Work Practice Controls

- Provide an enclosed conveying system, such as a screw or pneumatic conveyor, in place of an open conveyor belt where possible.
- Totally enclose and exhaust ventilate the conveyor from loading to transfer points.
  - Conveyor Belt Ventilation Diagram
  - Belt Conveying Head Pulley Diagram
- Provide an exhaust ventilated enclosure at the conveyor loading and unloading points to minimize dust emissions.
  - Conveyor Belt Loading Diagram

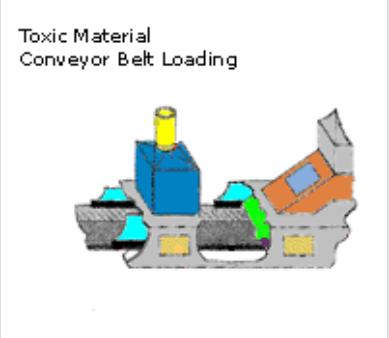

View larger image of conveyor belt loading diagram

- Provide a trough belt and conveyor skirting to minimize spillage.
  - Dust Control Handbook: Belt Conveyors. OSHA and the Bureau of Mines, U.S. Department of the Interior (1987, February), 20 pages. This handbook consolidates information developed by industry and government laboratories on dust control engineering techniques for metal and nonmetal mineral processing.
- Provide a baffle to ensure the unloading of conveyor at transfer point.
- Provide a belt scraper at the discharge end to dislodge dust particles that may adhere to the belt surface.
- Provide access doors to conveyor and transfer point enclosures to facilitate maintenance, wash down, and other activities.
- Use top-hinging doors for inspection to prevent spillage of leaded material.
- Provide drains and sumps in conveyor trench to collect wash water and mud.
- Provide hose bibs for manually washing the conveyor equipment.
- Wet down materials to suppress dust generation.

back to top

Drag link Conveyor

Tubular drag link conveying systems consist of disc-shaped flights attached to a chain inside a tubular housing. The chain is driven by a motor connected to a drive sprocket. Hoppers located above holes in the housing, feed material into the

conveyor; holes cut in the bottom of the housing form the outlet.

Figure 1
Drag link conveyor

Potential Source of Exposure

- Lead dust may be emitted from open conveyor systems at:
  - The receiving end.
  - The discharge end.
  - Leaking flange connections.

Possible Engineering and Work Practice Controls

- Provide a preventive maintenance program to maintain system integrity.
  - Adjust the takeup (usually located near the drive sprocket) regularly to remove slack in the chain caused by stretching.
  - Inspect the chain and flights periodically for material buildup and wear.
  - Replace chain and flight components through the inspection opening to avoid dismantling the conveyor.
- Totally enclose and exhaust ventilate the conveyor from loading to transfer points.
  Drag link Conveyor Configuration Diagram #1
  Drag link Conveyor Configuration Diagram #2

Figure 2
Chain and flights (white discs) of a drag link conveyor

Figure 3
Clear tube showing how the drag link conveyor works

back to top

Screw Conveyors

Screw conveyors are sometimes used in the battery manufacturing industry to transport lead oxide to the paste mixing area (Figure 4).

Figure 4
Enclosed screw conveyor

Potential Sources of Exposure

- Lead dust may be emitted from leaking screw conveyors and at discharge points.

Possible Engineering and Work Practice Controls

- Enclose screw conveyor systems that transport leaded materials.
  - Dust Control Handbook: Screw Conveyors. OSHA and the Bureau of Mines, U.S. Department of the Interior (1987, February), 20 pages. This handbook consolidates information developed by industry and government laboratories on dust control engineering techniques for

metal and nonmetal mineral processing.

- Enclose and exhaust ventilate screw conveyor transfer points.
  - Dust Control Handbook: Transfer Chutes. OSHA and the Bureau of Mines, U.S. Department of the Interior (1987, February), 20 pages. This handbook consolidates information developed by industry and government laboratories on dust control engineering techniques for metal and nonmetal mineral processing.
- Maintain cover gaskets and repair leaks immediately.
  Screw Conveyor Components
- Establish a preventive maintenance program for all lead handling processes and equipment.

back to top

Classification

Air classification equipment (cones or cyclones) operate by applying opposing air flows and centrifugal forces to the oxide material. By balancing the two forces, the heavier particles spiral out and down where they are collected, and finer particles flow up to the top, where they may be passed to another cyclone with finer classification capability. Through this process, the desired particle size distribution is obtained.

Figure 5
Cyclone classifiers

Potential Sources of Exposure

- Leaking equipment.

Possible Engineering and Work Practice Controls

- Provide a preventive maintenance program to maintain system integrity.

back to top

Lead Battery Manufacturing

Oxide and Grid Processing > Paste Mixing

During the paste mixing process, lead oxide, water, acid, and other chemicals are blended in a mixer to form a thick paste. The major source of lead exposure in this process is from lead oxide that escapes from the paste mixing machine, dries, and becomes airborne.

- Paste Mixing
- Video Exposure Monitoring: Paste Mixing

Paste mixer with supplied air island above testing station
View larger image of paste mixer

Paste Mixing

Potential Sources of Exposure

Figure 1
Ventilated paste mixer

- Major sources of exposure are leaking equipment such as:
  - oxide conveyance,
  - weigh hoppers,
  - or mixer door seals.
- Ventilation may be inadequate due to moist material plugging the system, which may allow lead dust to become airborne, or allow rising air currents to carry suspended lead to the employee's breathing zone.
- Sampling and testing oxide or paste may increase the employee's exposure to lead.
- Lead-containing expander may become airborne when added to the paste mixer.
- Manually scraping and cleaning the mixer during cleanup or while changing pastes may cause lead particles to become airborne.

View larger image of paste mixing, testing station diagram

- Lead exposure may increase when there is re-entrainment of dried and settled lead on buckets, the cone feeder, or other equipment.
- Lead dust can become airborne when workers fold lead-containing expander bags for disposal outside of a ventilated enclosure.
- Lead oxide can become airborne when dried oxide flakes off of gloves and hand tools.

Safety and Health Topics Page

Oxide and Grid Processing
- Oxide Production
- Oxide Receiving
- Oxide Conveyance and Classification
- Paste Mixing
- Grid Production and Parts Casting

Plate Processing

Battery Assembly

Battery Repair and Reclaim

Environmental Controls

Maintenance

Engineering Controls

OSHA Lead Requirements...

Source Identification Protocol

- When a cone feeder is empty, heat rising from the pasting machine causes a chimney affect. This may dry out the oxide and suspend it in the rising air currents.

- Lead dust and particles may become airborne due to drafts and air currents caused by moving equipment or motor drives.

Possible Engineering Controls

- Use local exhaust ventilation.
  - Perform testing and sampling at ventilated workstation.
    Paste mixing testing station

  - Provide exhaust ventilation at sampling port on mixer, and at expander handling areas.

  - Design clean-out hatches on exhaust system to facilitate cleaning.

  - Ensure ventilation is working properly and has adequate transport velocity. Recommended transport velocity for lead particulate is 4200 - 4500 fpm.
    Paste mixer, dual mixer emission controls, Part A
    Paste mixer, dual mixer emission controls, Part B
  - Keep weigh hopper, delivery system, and mixer continually under negative pressure (Figure 1).

  - Enclose the mixing platform tightly and keep under negative pressure.
- Maintain systems so they are leak-free.

- Install Laminar Flow (Supplied Air) Islands at operator work station.

- Eliminate manually handling paste by arranging mixer equipment so the cone discharge is directly over the paste machine feed hopper.

Possible Work Practice Controls

- Ensure that the exhaust vent damper control does not allow moist air from the acid addition cycle to go into the dry dust collector side of the system.

- Keep the cone feeder from becoming empty.

- Watch for oxide leaks and immediately report them to supervisors.

- Close all openings and doors to mixers.

- Empty lead-containing expander slowly into mixer while it is under negative pressure, then carefully discard the empty bags in a closed container.

- Do not shake or crush empty expander bags.

- Do not hammer the mixers, cone feeders, hoppers, ductwork or any other paste or oxide vessel with tools to loosen oxide or paste.

- Use plastic or some other material, which will not become heavily contaminated with oxide, to cover tubs of paste.

- Provide adequate PPE, a change of clothes, and shower rooms (see OSHA Lead Requirements for PPE, Housekeeping, and Hygiene Facilities).

- Maintenance:
  - Report to supervisors all mechanical problems such as defective seals at oxide transfer points, mixer doors, holes in the mixer or broken seals on the oxide screw conveyer.
  - Repair defective equipment promptly (see Preventive Maintenance Program).

- Housekeeping:
  - Wipe down exterior of mixer with a light coat of oil.
  - Use a central vacuum drop to remove any oxide spills or leaks at the oxide delivery area and at the mixing operator station.
  - Use high-pressure water spray instead of a putty knife during mixer cleanout.
  - Use a putty knife with a long handle if high-pressure water spray is not available.
  - Place tools such as putty knives or spatulas in a pail of water after use.
  - Keep tubs used for transporting paste clean.

back to top

Video Exposure Monitoring: Paste Mixing

With video exposure monitoring (VEM), worker exposures to lead are monitored and recorded with a direct reading instrument. At the same time, workplace activities are recorded on a videotape. The left hand bar indicates changes in total dust concentrations over time.

As the employee loads material to the paste mixer, the red bar indicates increasing employee exposure occurs while dumping containers into the mixer.

Low Bandwidth Video
Dial up Modem, ISDN

High Bandwidth Video
LAN, DSL, T1, T3

Note: This example illustrates how VEM can be used for determining sources of employee exposure. Other sources can be determined by using VEM sampling for a full work shift.

back to top

Lead Battery Manufacturing

Oxide and Grid Processing > Grid Production (Book Casting and Continuous Casting), Strip Casting, and Parts Casting

In all of these processes, lead pigs are melted down and the molten lead is poured into molds or continuously cast into grids, strips, or parts. Expanded metal grid production involves mechanical operations on the cast strip and is not a source of airborne lead dust or oxide. The major source of lead exposure in this process is from lead fumes and lead oxide which can become easily airborne.

Grid production machine

Grid Production and Parts Casting

Potential Sources of Exposure

- Drossing the lead pot may increase lead exposure.
- High levels of lead fumes are generated when a flame is put in contact with lead, such as when cutting out frozen pots.
- Settled lead dust on surfaces and equipment may become airborne due to exhaust from fuel-powered fork-lifts or vehicular traffic.
- High exposure to lead fumes can occur when the pig is loaded into the lead pot.
- Airborne lead dust can migrate from other areas of the plant depending on the plant layout.
- Separator boards may become contaminated by using lead contaminated pallets that have not been cleaned after

Figure 1
Lead pot enclosure

Safety and Health Topics Page

Oxide and Grid Processing

Oxide Production

Oxide Receiving

Oxide Conveyance and Classification

Paste Mixing

Grid Production and Parts Casting

Plate Processing

Battery Assembly

Battery Repair and Reclaim

Environmental Controls

Maintenance

Engineering Controls

OSHA Lead Requirements...

Source Identification Protocol

being returned from the pasting line.

- Dust may become airborne as a result of using a rotary sander for cleaning molds.
- Oxide that has collected on the dross ladle may become airborne while cleaning or storing it in an area outside the hood.

Possible Engineering Controls

- Develop a system to minimize the formation of dross.
- Place a local exhaust ventilation on the lead melting pot and the dross pot (Figures 1, 2, and 3).
  - Lead pot and dross hood Part A
  - Lead pot and dross hood Part B
- Dross with a ladle with holes in it to allow lead to drain back into the pot.
- Install Laminar Flow (Supplied Air) Islands at the drossing station if exposures exceed the PEL.
- Provide local slot ventilation or a ventilated torch for cutting out frozen pots.
  - Ventilated torch
- Suspend plastic curtains to separate the casting areas from the traffic areas.
- Isolate the lead pots from casting operations.

Possible Work Practice Controls

- Handle dross carefully within a ventilated enclosure.
- Keep the doors closed on the dross cabinets when drossing into the containers.
- Keep the dross covered near an open door, window, or near areas of vehicular traffic; wind may cause powdery dross to become airborne.
- Cool waste drums under exhaust ventilation.
- Enclose cooled waste drums with a ply bag prior to storage (Figure 3).
- Do not add sawdust to the dross.
- Keep dross from calcium and antimonial alloys separate and dry since arsine and stibine gases could be emitted.

View larger image of lead pot and dross hood part B

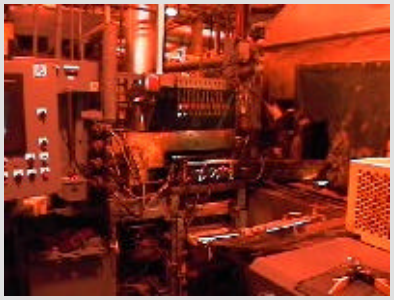

Figure 2
Continuous grid casting machine

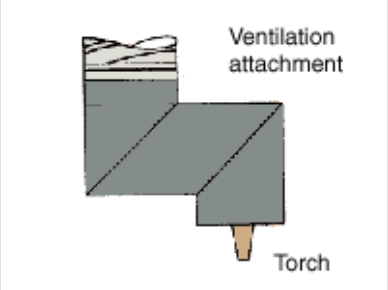

View larger image of ventilated torch

Figure 3
Ventilated and automated lead pot

- Slide pigs into the casting pots.
- Use a long-handled push rod or mechanical system to feed the pigs into the pot.
- Use separate pallets for grid storage and pasted plate storage (Figure 4).
- Provide adequate PPE, change of clothes, and shower rooms (see OSHA Lead Requirements for PPE, Housekeeping, and Hygiene Facilities).
- Maintenance:
  - Ensure ventilation is working properly.
  - Use electric powered fork lifts.
  - Use an automatic conveyance system.
  - Avoid using a rotary sander to clean molds.
- Housekeeping:
  - Use dust suppression techniques, such as, using dust suppression compounds or vacuuming.
  - Keep the floor areas and work surfaces around the lead pots and lead storage areas free of oxide dust.
  - Scrape metal splashes with a shovel or long-handled scraper.

View larger image of supplied air island

Figure 4
Waste drum under exhaust ventilation

Figure 5
Lead-contaminated separator boards

back to top

Lead Battery Manufacturing

Plate Processing

Plate processing combines the oxide paste and the grids to prepare plates for assembly into batteries.

- Grid Pasting
- Hydrosetting
- Parting
- Enveloping and Wrapping

Plate processing

Safety and Health Topics Page
Oxide and Grid Processing
Plate Processing
Grid Pasting
Hydrosetting
Parting
Enveloping and Wrapping
Handling and Transport
Battery Assembly
Battery Repair and Reclaim
Environmental Controls
Maintenance
Engineering Controls
OSHA Lead Requirements...
Source Identification Protocol

Lead Battery Manufacturing

Plate Processing > Pasting

During the pasting process, lead oxide paste is applied to the grid panels in a pasting machine to fill the spaces of the grid. The major source of lead exposure in the pasting process comes from lead oxide in the paste which can become easily airborne once it dries.

Pasting machine

Workers may be exposed to lead dust during pasting and take-off operations. Contaminated gloves, clothing, tools, and equipment may also be a source of lead exposure.

- Pasting Operations
- Video Exposure Monitoring: Shoveling Paste
- Take-Off/Offbearer Operations
- Video Exposure Monitoring: Pasting Take Off

Pasting Operations

Potential Sources of Exposure

- Dried paste on equipment and other areas, such as the mixer, cone feeder, paste transfer equipment, paste return belt, pasting machine, floors, and adjacent areas, may become airborne due to equipment vibration or by being disturbed and as described below (Figure 1):
  - Scraping lead oxide off the hopper and exterior of the cone feeder during cleanup and upsets.
  - Inadequate exhaust ventilation on the drying oven.
  - Settled oxide on the housings of rotating drives and motor cooling fans (see Figure 2).
  - Improper handling and disposal of paste accumulated on the floor or other surfaces (see Figure 3).
  - Dried dust on equipment, controls, and gloves during operation of equipment located near the breathing zone.

Figure 1
Dried paste on work area

Figure 2
Oxide on motors

Safety and Health Topics Page
Oxide and Grid Processing
Plate Processing
Grid Pasting
Hydrosetting
Parting
Enveloping and Wrapping
Handling and Transport
Battery Assembly
Battery Repair and Reclaim
Environmental Controls
Maintenance
Engineering Controls
OSHA Lead Requirements...
Source Identification Protocol

- Dried oxide on the floor or other surfaces being disturbed by employees, vehicle traffic, or wind.

Possible Engineering Controls

- Use a laminar flow (supplied-air) island providing 90-175 feet per minute at the face velocity of the plenum.
    - Use plastic skirting to increase hood efficiency (the skirt prevents induced air from entering the clean air stream).
- Install exhaust ventilation around paste machine feed hopper to prevent dust generation during scraping, cleanup, and operation (see Figure 4).
- Enclose oven all the way to the floor.
    - The oven or conveyor chain may stir up or re-suspend settled lead oxide dust that may escape through an open door.
- Maintain negative pressure in drying oven ventilation.
    - Ventilation efficiency decreases if oxide is allowed to build up in the bottom of the drying oven.
- Provide a fine water mist for paste return belts (see Figure 5).
- Use a totally encapsulated fan-cooled motors to reduce dust generation.

Possible Work Practice Controls

- Prohibit cooling fans or open doors and windows, which cause cross drafts or thermals and destroy effectiveness of local exhaust.
- Keep oven doors closed at all times.
- Keep breathing zone away from oxide or dry paste.
    - Place machine controls at machine level, not overhead near hopper.
- Provide adequate PPE, change of clothes, and shower rooms (see OSHA Lead Requirements for PPE, Housekeeping, and Hygiene Facilities).
- Housekeeping:
    - Clean up paste spills immediately.

Figure 3
Improper disposal of paste

Figure 4
Ventilate and partially enclose feed hopper

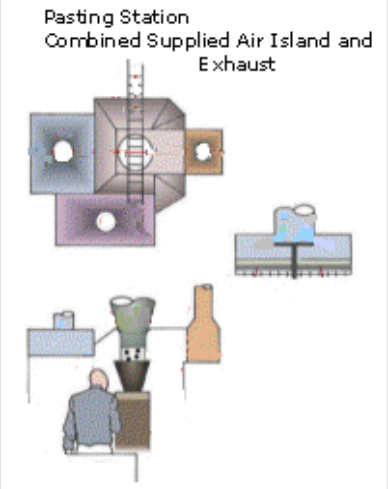

View larger image of pasting station, combined supplied air and exhaust diagram

Figure 5
Fine water mist on paste return belt

- If a paste spill was caused by mechanical problems, report it to a supervisor.

- Shovel paste and dispose of it in ventilated barrels in a manner to minimize airborne dispersion of lead.
  Scrap handling, barrel/drum exhaust hood

- Clean out oven regularly.

  - Buildup of oxide dust in the oven may cause an imbalance in the ventilation and raise airborne lead concentrates. Note: Water sprayed on a hot oven conveyor belt can be a high source of lead-in-air.

- Use dust suppression techniques such as keeping floors wet, using dust suppression compounds or vacuuming.

  - Using recycled water may increase lead-in-air levels if the water dries. Air bubbles in the water may pop and allow lead to escape into the air.

- Use long handle scrapers or putty knives.

- Wash-down equipment with water.

- Control pressure and direction of spray to prevent splash-back.

- Clean equipment at least once each shift.

- Coat equipment with a peanut oil and water emulsion to aid adhesion of dry oxide and to facilitate cleanup.

back to top

Video Exposure Monitoring: Shoveling Paste

With video exposure monitoring (VEM), worker exposures to lead are monitored and recorded with a direct reading instrument. At the same time, workplace activities are recorded on a videotape. The left hand bar indicates changes in total dust concentrations over time.

As the employee shovels lead paste into the pasting machine hopper, the red bar indicates increasing employee exposure to lead dust.

Low Bandwidth Video
Dial up Modem, ISDN

High Bandwidth Video
LAN, DSL, T1, T3

Note: This example illustrates VEM can be used for determining sources of employee exposure. Other sources can be determined by using VEM sampling for a full work shift.

back to top

Take-Off/Offbearer Operations

Potential Sources of Exposure

- Lead oxide dust may become airborne:
  - From handling dry plates or moving plates in and out of the workstation.
  - From the buildup of dust on equipment, racks, and floor.
  - When workers brush plate lugs during parting.
  - When workers improperly handle or dispose of scrap plates and oxide from catch tray.
  - From inadequate capture velocity for tamping plates.
  - From upset conditions or while clearing jam-ups in equipment.
  - From dried oxide on contaminated gloves, clothing, shoes, and tools.

Figure 5
Handling plates

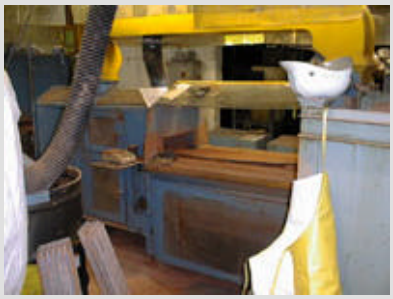

Figure 6
Pasting take-off

Possible Engineering Controls

- Place scrap plates into a ventilated barrel or box and dispose of them properly (see Figure 7). When designing and building local exhaust ventilation keep flexible tubing to a minimum.
  Scrap handling, barrel/drum exhaust hood
- Place a slot or down draft ventilation at take off station.
- Provide properly designed exhaust ventilation for the workstation.
  Integrated controls, plate take-off
- Provide exhaust between oven and take-off workstation to prevent dust contamination generated from existing plates and conveyor chains.
  Plate parting, transition hood between flash drier and take-off
- Provide ventilated lug brush.
- Use exhaust ventilated plate racks.
  Plate storage rack hood
- Break plates inside of hood or over ventilated tamping stand.

Figure 7
Ventilated scrap barrel

Figure 8
Suspended plastic curtains

Pasting take-off, work station hood

Figure 9
Pasting take-off and lug removal

- Evaluate the technical feasibility of robotics or automatic plate catching.
- Use dust suppression techniques such as using dust suppression compounds, or vacuuming, where practical.
- Provide a clear plastic plate between the operators breathing zone, and the conveyor and tamping stand.
- Install a piece of Plexiglas across the front of the hood to increase hood efficiency and prevent possible contaminated air from being induced into the operator's breathing zone while allowing the operator to see clearly.
- Use a laminar flow (supplied-air) island at workstation.
- Ventilate the testing station.
  Test station ventilation
- Note: Industrial batteries may require ventilation that is not always necessary for SLI batteries. This includes rack ventilation, a ventilated lug breaking station and a directed air system through the operator's breathing zone.

Possible Work Practice Controls

- Leave work shoes or shoe coverings in the pasting department to avoid transport of lead throughout the plant.
- Vacuum table, equipment, and racks to prevent accumulations of oxide.
- Use dust suppression techniques such as keeping floors wet, using dust suppression compounds or vacuuming.
  - Using recycled water may increase lead-in-air levels if the water dries. Air bubbles in the water may pop and allow lead to escape into the air.
- Provide adequate PPE, a change of clothes, and shower rooms (see OSHA Lead Requirements for PPE, Housekeeping, and Hygiene Facilities).
- Brush toward the hood ventilation when brushing lugs, the edge of the panels, or the plates to remove adhering oxide.
- Cover ventilated barrels or boxes with a plastic bag before moving it, or if a wax-coated cardboard box is used, close, and remove to storage.
- Do not store plates on ventilated tamping stands.
- Do not break plates on a metal plate or solid board.
- Prohibit cooling fans or open doors and windows that cause cross drafts or thermals and destroy the effectiveness of local exhaust.

back to top

Video Exposure Monitoring: Pasting Take-Off

With video exposure monitoring (VEM), worker exposures to lead are monitored and recorded with a direct reading instrument. At the same time, workplace activities are recorded on a videotape. The left hand bar indicates changes in total dust concentrations over time.

As the employee removes plates from the pasting machine and brushes the edges of the plates, the red bar indicates increasing employee exposure to lead dust.

Low Bandwidth Video

Dial up Modem, ISDN

High Bandwidth Video

LAN, DSL, T1, T3

Note: This example illustrates how VEM can be used for determining sources of employee exposure. Other sources of employee lead exposure can be determined by using VEM sampling for a full work shift.

back to top

PLATE PARTING

TRANSITION HOOD BETWEEN FLASH DRIER AND TAKE OFF

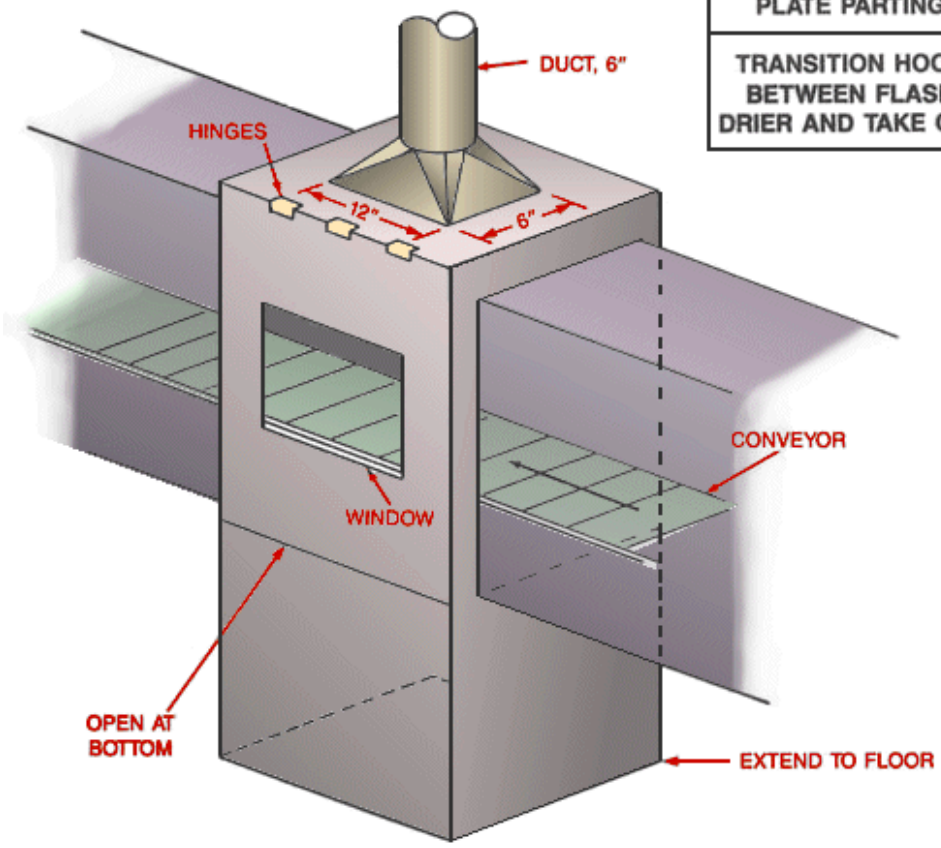

DESIGN CRITERIA

$Q \cong 1200$ ctm $V_{DUCT} \cong 6{,}000$ fpm $SP_h = 3.4''$ W-6 $he = 0.44\ VP_{DUCT}$	or	SIZE FOR Q=400 fpm AT OPENINGS TO ROOM (BOTTOM OF HOOD)

Lead Battery Manufacturing

Plate Processing > Hydrosetting

Hydrosetting methods vary between battery plants, ranging from placing the pasted plate racks in the workroom to placing the racks within a temperature- and humidity-controlled room or chamber. The major source of lead exposure in the hydrosetting process comes from lead oxide when the grids are handled incorrectly.

Hydrosetting oven

Hydrosetting

Potential Sources of Exposure

- Lead may become airborne from handling or moving dry plates.
- Lead particulate may become airborne from positioning pallets of pasted plates near drafts or thermals.
- Handling burlap that has been contaminated with lead oxide improperly.

Possible Work Practice Controls

- Do not cover with burlap; instead use plastic or some other material that will not become heavily contaminated.
- Position pallets away from cross drafts or thermals.
- Vacuum pallets, racks, and edges of plates and panels to prevent dried lead-bearing dust from being re-entrained.
- Provide adequate PPE, a change of clothes, and shower rooms (see OSHA Lead Requirements for PPE, Housekeeping, and Hygiene Facilities).

back to top

Safety and Health Topics Page
Oxide and Grid Processing
Plate Processing
Grid Pasting
Hydrosetting
Parting
Enveloping and Wrapping
Handling and Transport
Battery Assembly
Battery Repair and Reclaim
Environmental Controls
Maintenance
Engineering Controls
OSHA Lead Requirements...
Source Identification Protocol

Lead Battery Manufacturing

Plate Processing > Parting

Grids are commonly produced and pasted as pairs called pasted plates or panels. They must be separated before the battery can be built. The major source of lead exposure in the parting process comes as a result of the grids being handled incorrectly, which causes particles to become airborne when plates are cut or broken.

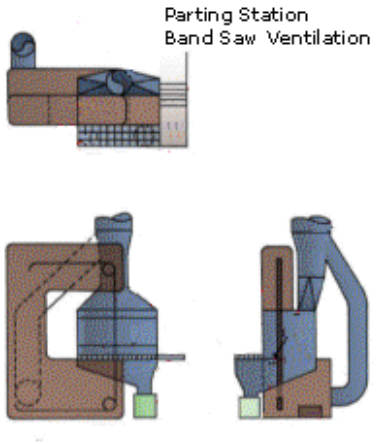

View larger image of parting station, band saw ventilation

Parting

Potential Sources of Exposure

- Lead dust may become airborne when workers handle dry plates and move plates in and out of the workstation.
- Lead oxide may become airborne when there is dried oxide on equipment, racks, and floors. This is especially critical for dry-charge batteries since formation and curing in the oven has already occurred and the plates are dry.
- Increased exposure to lead may occur when workers use buffing wheels or parting saws that throw particulate faster than the local exhaust ventilation can handle.
- Lead oxide particles may become dislodged and airborne during clearing of machine jam-ups.
- Lead dust may become airborne due to improper disposal of defective plates.
- Lead dust may become airborne due to emptying the clean-out tray improperly.
- Leaking tamping boxes contribute to settled dust on the floor.

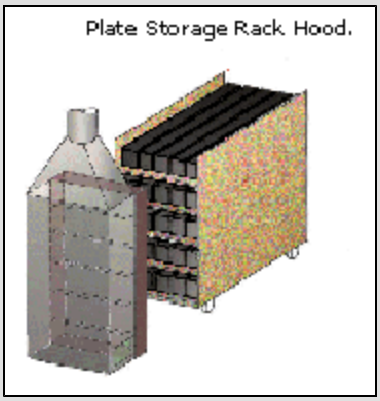

View larger image of plate storage rack hood

Figure 1
Ventilated scrap barrel

Safety and Health Topics Page
Oxide and Grid Processing
Plate Processing
Grid Pasting
Hydrosetting
Parting
Enveloping and Wrapping
Handling and Transport
Battery Assembly
Battery Repair and Reclaim
Environmental Controls
Maintenance
Engineering Controls
OSHA Lead Requirements...
Source Identification Protocol

Possible Engineering Controls

- Ventilate work station, using a down draft or a slot hood with a grating or perforated plate tamping stand.
- Provide an opening in the tamping stand or raised positions so lugs will not be impacted.
- Use ventilated scrap barrel (Figure 1).
  Scrap handling, barrel/drum exhaust hood
- Provide a vacuum drop at the workstation (Figure 2).
- Retrofit buffing wheels on parting machines with stationary brushes.
- Enclose ends of machine to prevent particles from being thrown out.
- Use a radial saw with local exhaust ventilation instead of a band saw.
  Parting Station, Band Saw Ventilation
- Clamp plates to a tilt plate when using a band saw, fit it with a long handle so the operator can stand beside the hood opening while cutting plates.
- Use a laminar flow (supplied-air) island.
- Use a guide bar (belly bar) to prevent the operator from leaning against equipment.

Figure 2
Vacuuming grid plates

Figure 3
Contaminated clothing

Figure 4
Water wash-down

- Install see-through glass or a plastic plate at the tamping stand and breaking station.
- Exhaust ventilate rack.
- Provide a rotating base for pallet of plates.
- Locate racks close to workstation, in ventilated areas.

Possible Work Practice Controls

- Do not bang plates excessively during manual plate breaking.
- Do not break plates on metal plate or a solid board.
- Handle plates only with hands.
- Do not lean plates against the stomach.
- Wear an apron (Figure 3).
- Place, do not throw, defective plates into scrap barrel.
- Cover drums with a plastic bag before removing from area.
- Keep access doors closed.

- Provide adequate PPE, a change of clothes, and shower rooms (see OSHA Lead Requirements for PPE, Housekeeping, and Hygiene Facilities).
- Maintenance:
  - Ensure ventilation is working properly.
  - Prevent cross drafts.
  - Enclose hood opening.
- Housekeeping:
  - Vacuum clean-out trays, do not dump into barrels.
  - Use dust suppression techniques including keeping floors wet (where it does not create a hazard), using dust suppression compounds or vacuuming (Figure 4).
  - Vacuum the tops of trays, workstations, and adjacent areas.

back to top

Lead Battery Manufacturing

Plate Processing > Enveloping and Wrapping

Enveloping involves placing a plate (usually positive), either automatically or manually, within porous membranes. The major sources of exposure in this process result from lead oxide being released when the plates are handled incorrectly.

Enveloping Machine

Enveloping and Wrapping

Potential Sources of Exposure

- Lead oxide may become airborne due to workers improperly handling plates at the feed and discharge ends of enveloping machines as well as from the bellows effect when handling unsealed envelopes.
- Exposure to lead may occur when the lead oxide that has accumulated on equipment, racks, and floors becomes airborne.
- Lead dust may become airborne when workers improperly handle scrap plates.
- Lead may contaminate clothing when a worker leans against contaminated equipment.
- Increased exposure to lead oxide may occur when tamping plates in unventilated areas, such as the rack, creates puffs of lead dust.

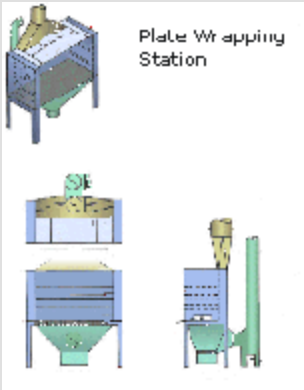

View Larger image of plate wrapping station diagram

Figure 1
Oxide build up on machines

Possible Engineering Controls

- Use local exhaust ventilation, such as a grating or a perforated plate tamping stand that is equipped with downdraft and side-draft ventilation (Figure 4).
- Enclose and ventilate equipment.
- Use a ventilated scrap barrel.
  Scrap handling, barrel/drum exhaust hood
- Provide a vacuum drop at the workstation.

Figure 2
Wear an apron

Safety and Health Topics Page
Oxide and Grid Processing
Plate Processing
Grid Pasting
Hydrosetting
Parting
Enveloping and Wrapping
Handling and Transport
Battery Assembly
Battery Repair and Reclaim
Environmental Controls
Maintenance
Engineering Controls
OSHA Lead Requirements...
Source Identification Protocol

- Use a rotating base for placing pallets of plates so employees do not have to reach across.

- Use a laminar flow (supplied-air) island over operators workstation.

Figure 3
Enveloping machine

Possible Work Practice Controls

- Tamp plates carefully over ventilated work station.
    - Do not bang plates excessively while tamping.
- Keep open ends of envelopes away from the face.
- Handle groups of plates with hands only rather than leaning them against the stomach.
- Wear an apron (Figure 2).
- Place, do not throw, defective plates into a scrap barrel.

Figure 4
Tamping stand that is equipped with down-draft and side-draft ventilation

- Cover drums with a plastic bag before removing them from the area.
- Seal all doors, windows, and other openings on the enveloping machine.
- Perform plate parting at the local exhaust ventilation (downdraft or side-draft), and not while the plates are moved from the pallets to the enveloping equipment.
- Do not store plates on ventilated tamping stands.
- Provide adequate PPE, a change of clothes, and shower rooms (see OSHA Lead Requirements for PPE, Housekeeping, and Hygiene Facilities).
- Maintenance:
    - Ensure ventilation is working properly.
    - Prevent cross drafts.
    - Catch material that is too heavy to be conveyed by the ventilation system in a plastic bag (not catch drawers).
- Housekeeping:
    - Vacuum the separator boards, workstation, and adjacent areas.
    - Use dust suppression techniques, such as keeping the floor wet, using dust suppression compounds, or vacuuming.
    - Ensure plate trays are vacuumed clean.

back to top

Lead Battery Manufacturing

Plate Processing > Handling and Transport

Handling and transporting of materials is an essential part of the battery manufacturing process. Materials are primarily transported through the use of mobile equipment (forklifts). Proper operator training, prudent work practices, and good housekeeping are key in minimizing lead emissions during mobile equipment operation. Conversely, careless equipment operation coupled with inadequate housekeeping can lead to serious lead exposure throughout the plant.

Mobile Equipment

Potential Sources of Exposure

- Lead dust from feed materials can become airborne during handling and transport (Figure 1).
- Lead dust that has settled on surfaces and equipment may become airborne due to vehicle traffic and wind.

Figure 1
Forklift transporting materials

Possible Engineering and Work Practice Controls

- Reduce vehicle speeds to minimize stirring up settled dust.
- Clean the inside and outside of mobile equipment frequently.
- Periodically clean floor surfaces to reduce accumulation of lead dust.
- Pave all roadways to facilitate housekeeping.

Figure 2
Hand truck

- If it is determined that lead dust is coming from mobile equipment or is from adjacent areas, evaluate material handling patterns and practices and area isolation.
- Provide dedicated fork lifts for clean and dirty areas to avoid cross contamination.
- Raise and lower loads gently to prevent jarring.
- Vacuum any skid, pallet, tub, or other conveyance that holds or has held plates before moving.

Other Hazards

- Vehicle accidents may occur during the material transport, which may release contaminated material throughout the plant.

Possible Solutions

- Ensure that each vehicle is equipped with hazard lights and audible horns.
- Ensure that loading and receiving docks are clearly marked and lighted.
- Write schedules for all drivers and operators, to minimize "surprises."

back to top

Safety and Health Topics Page
Oxide and Grid Processing
Plate Processing
Grid Pasting
Hydrosetting
Parting
Enveloping and Wrapping
Handling and Transport
Battery Assembly
Battery Repair and Reclaim
Environmental Controls
Maintenance
Engineering Controls
OSHA Lead Requirements...
Source Identification Protocol

Lead Battery Manufacturing

Battery Assembly

Battery assembly combines the plates (see Plate Processing), container, and other parts into a functional battery. Battery charging is also an important part of assembly.

- Stacking
- Group Burning
- Intercell Welding and Post Burning
- Formation

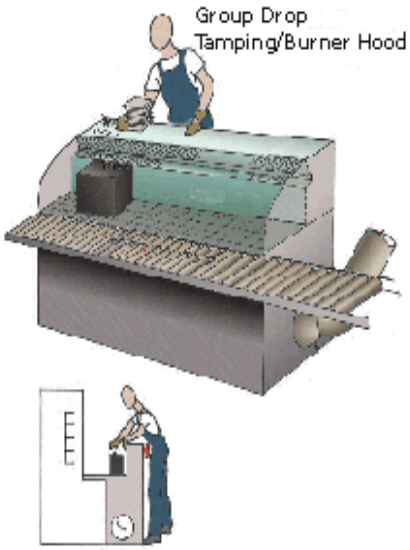

View larger diagram of group drop, tamping and burning hood

Safety and Health Topics Page

Oxide and Grid Processing

Plate Processing

Battery Assembly

Stacking

Group Burning

Intercell Welding and Post Burning

Formation

Battery Repair and Reclaim

Environmental Controls

Maintenance

Engineering Controls

OSHA Lead Requirements...

Source Identification Protocol

Lead Battery Manufacturing

Battery Assembly > Stacking

After curing, the plates are stacked either by hand or by machine so that positive and negative plates alternate with an insulating separator in between. The major source of lead exposure in the stacking process is from oxide from the plates which can become easily airborne.

Manual stacking station

Stacking

Potential Sources of Exposure

- Exposure to lead dust may occur from improperly handling plates in unsealed envelopes.
- Tamping plates in unventilated areas, such as the rack, creates a puff of dust.
- Lead oxide that accumulates on equipment, racks, and floors may become airborne.
- Clearing stacking equipment jam-ups.
- Exposure to lead may increase when scrap plates are handled improperly.
- Leaning against equipment may increase clothing contamination.
- Exposure to lead may increase from emptying clean-out trays improperly.
- Lead dust may escape from the stacking machine if the hinged panels are not closed.

Figure 1
Ventilated scrap barrel

Figure 2
Contaminated clothing

Safety and Health Topics Page

Oxide and Grid Processing

Plate Processing

Battery Assembly

Stacking

Group Burning

Intercell Welding and Post Burning

Formation

Battery Repair and Reclaim

Environmental Controls

Maintenance

Engineering Controls

OSHA Lead Requirements...

Source Identification Protocol

Possible Engineering Controls

Figure 3
Central Vacuum drop station

Figure 4
Hand stacking

- Use downdraft or slot ventilation at workstations.
- Provide a grating or a perforated plate tamping stand.
  Stacking table, single exhaust booth hood
  Stacking, slant stacking station (industrial)
- Use a ventilated scrap barrel (Figure 1).
- Use a central vacuum drop.
  - Consider adding particulate drop out points so that large particles will drop out and not plug the lines.
- Provide exhaust ventilated storage rack.
  Plate storage rack hood
- Place pallets of plates on a rotating base.
- Use local exhaust ventilation with machines that use shuttles for moving plates.
  - These machines may have higher airborne levels due to abrasion of the plates.
- Use a laminar flow (supplied-air) island over operators workstation.
- Provide a plastic or glass, see-through plate between the stackers breathing zone and the plates.
- Provide rubber mats or grated walking surfaces.

Possible Work Practice Controls

- Tamp, break, or separate plates only in ventilated work areas.
- Handle groups of plates with the hands only rather than leaning them against the stomach, chest, or chin.
- Wear an apron (Figure 2).
- Maximize the distance between the operators breathing and the plates by not stacking assembled groups more than three high.
- Place, do not throw, defective plates into scrap barrel.
  Scrap handling, barrel/drum exhaust hood
- Cover drums with a plastic bag before removing them from the area.
- Keep access doors and other openings closed.
- Provide adequate PPE, a change of clothes, and shower rooms (see OSHA Lead Requirements for PPE, Housekeeping, and Hygiene Facilities).

- Maintenance:
  - Ensure ventilation is working properly.
  - Prevent cross drafts.
- Housekeeping:
  - Vacuum work station and adjacent areas to prevent accumulation of oxide dust.
  - Vacuum off each row of plates before using.
  - Use dust suppression techniques, such as keeping floors wet, using dust suppression compounds, or vacuuming.
  - Vacuum clean-out trays (Figure 3); do not dump them into barrels.

back to top

Lead Battery Manufacturing

Battery Assembly > Group Burning

After the plates have been stacked, they are joined with small connecting parts and burned together to form cell elements or groups. This operation is conducted either manually at a burning station or by using an automatic cast-on-strap (COS) machine. The major source of lead exposure in the group burning process comes from lead fumes that workers may come into contact with during the following operations:

Group burning operation

- Automatic COS Machines
- Manual Group Burning
- Group Repair Operations
- Cleaning Molds
- Adjusting/Repairing Equipment

Automatic COS Machines

Potential Sources of Exposure

- Exposure to lead may increase from handling dry plates or moving plates in and out of the workstation.
- Lead oxide that accumulates on racks, equipment, and floors may become airborne.
- Lead particles may become airborne when groups are dropped into the cases.
- Lead particles may become airborne during cleaning and roughing with a wire brush.
- Increased exposure to lead may occur during drossing or feeding the lead pot.

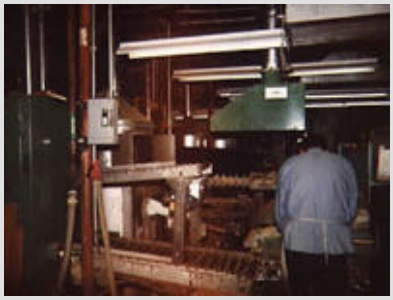

Figure 1
Ventilated COS machine

Figure 2
Vacuum plates before use

Possible Engineering Controls

- Install down draft or slot ventilation at the feed end (Figure 3).
  - Stacking table, single exhaust booth hood
- Enclose machine in a ventilated room (Figure 4).
  - Cast on strap (Farmer), total enclosure w/ exhaust
  - Cast on strap (Dynacast II), emission controls

Safety and Health Topics Page

Oxide and Grid Processing

Plate Processing

Battery Assembly

Stacking

Group Burning

Intercell Welding and Post Burning

Formation

Battery Repair and Reclaim

Environmental Controls

Maintenance

Engineering Controls

OSHA Lead Requirements...

Source Identification Protocol

- Provide an access door for maintenance and a small port for drossing and loading the lead pot.
- Provide local exhaust ventilation at the melting pot, mold heating section, dross pot, lug brush, and the casing areas.
- Position ventilation slot in the direction of the generated lead particulate, not behind the brush.
- Install an exhausted semi-enclosure around the brush to help collect particulate entrained in the brush.
- Install a laminar flow (supplied-air) island above the workstation.
- Use slot ventilation at burning and group dropping stations.
- Use an enclosed Lazy Susan for holding the stacked groups for the team stack and burn operations.
- Place a plastic sheet at the stacking side to control the height of the stacks and prevent cross drafts.
- Provide an exhaust ventilated enclosure for the lead pot and dross container.

Figure 3
Tamp plates over ventilated work station

Figure 4
Enclosed COS machine

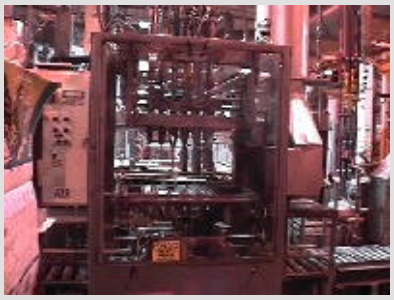

Figure 5
Automatic COS machine

Possible Work Practice Controls

- Avoid setting torches at excessive temperatures.
- Tamp plates only over ventilated workstations (Figure 3).
- Do not bang plates excessively.
- Use a grating or perforated plate tamping stand.
- When dropping groups into container, place opening toward exhaust ventilation.
- Handle groups only with hands; do not lean them against the stomach, chest, or chin.
- Wear an apron.
- Maximize the distance between the operators breathing zone and the plates by not stacking assembled groups more than three high.
- Stand on platform when practical.
- Keep openings to a minimum.
- Close access doors.

- Place, do not throw, defective plates into a ventilated scrap barrel.
  Scrap handling, barrel/drum exhaust hood

- Cover drums with a plastic bag before removing.

- Provide rubbers or gratings for walking surfaces.

- Provide adequate PPE, a change of clothes, and shower rooms (see OSHA Lead Requirements for PPE, Housekeeping, and Hygiene Facilities).

- See Grid Production and Parts Casting for additional possible engineering and work practice controls.

- Maintenance:
  - Ensure ventilation is working properly.
  - Prevent cross drafts.
  - Substitute cooler flames such as air-propane or air-MAP gas for oxy-acetylene.
  - Change torch head to decrease time required for burning.
  - Provide a plastic or glass plate between the breathing zone and the plates.
- Housekeeping:
  - Vacuum work stations and adjacent areas to prevent accumulation of oxide dust.
  - Vacuum off each row of plates or groups before use.
  - Vacuum tops of plate trays.
  - Vacuum clean out trays (do not dump them into barrels).
  - Use dust suppression techniques such as keeping floors wet, using dust suppression compounds, or vacuuming.

back to top

Manual Group Burning

Potential Sources of Exposure

Figure 5
Exhaust burning box

- Exposure to lead fumes may occur when burning with torches.

- Exposure to lead may result from moving groups in and out of the workstation and in and out of the burning box.

- Lead cross contamination can occur between the stacking and the burning stations during the manual group burning process.

- Lead particles may become airborne when groups are dropped into the cases.

- Exhaust ports of pneumatic systems may cause settled dust to become airborne.

Possible Engineering Controls

- Place the opening toward exhaust ventilation when dropping groups into a container.
  - Group drop, tamping/burner hood
  - Stack and burn, bench hood

Figure 6
Manual post burning operation

- Use down draft or slot ventilation at the work station.

- Install a rotating rack so the operator does not need to lean over contaminated racks to reach groups.

- Exhaust the burning box for both fume and dust (Figure 5).
  - Tiegal machine, enclosure assembly
  - Tiegal anchor, sinking machine

Figure 7
Ventilated torch

- Use local exhaust ventilation around torch head (Figure 8).
  - Post burning, portable tool exhaust

- Use slot ventilation at burning and group dropping stations.

- Use a smaller torch tip to lower fume exposure.

- Use an enclosed Lazy Susan to hold the stacked groups for the stacking and burning operations.

- Use a laminar flow (supplied-air) island above the operators workstation.

Possible Work Practice Controls

- See Work Practice Controls for Automatic COS Machines.

back to top

Group repair operations

Potential Sources of Exposure

- Exposure to lead may occur while repairing groups.

Possible Engineering and Work Practice Controls

Figure 8
Handle groups carefully

- Handle groups only with hands (Figure 8).
- Do not lean groups against the stomach, chest, or chin.
- Wear an apron.
- See Protective Clothing and Equipment.
- See Battery Repair for addition possible engineering and work practice controls.

back to top

Cleaning molds

Potential Sources of Exposure

Figure 9
Clean molds carefully

- Lead particulate may become airborne while cleaning molds using compressed air or torches.

Possible Engineering and Work Practice Controls

- Clean molds using alternative methods, such as vacuuming, that do not produce airborne lead particulate (Figure 9).
- Use local exhaust ventilation around torch head.
  Post burning, portable tool exhaust
- Use portable side draft or slot ventilation.

back to top

Adjusting/Repairing equipment

Potential Sources of Exposure

- Lead exposure may increase while adjusting and repairing equipment, or during changeovers.

Possible Engineering and Work Practice Controls

- Ensure ventilation is working properly.
- Prevent cross drafts.
- Wear an apron.
- See Protective Clothing and Equipment.

back to top

Lead Battery Manufacturing

Battery Assembly > Intercell Welding and Post Burning

After workers place all the groups in the battery case, the straps are fused together using a torch or high electrical power source. This process can also be done through the partition (TTP), using a case that has been punched. The connections are then welded. The units are tested and the posts are attached. The major source of lead exposure in the intercell welding process comes from lead fumes.

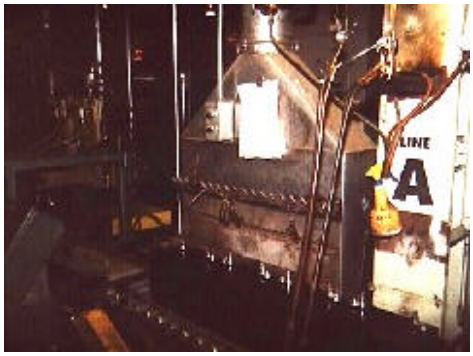

Manual post burning station

Intercell Welding and Post Burning

Potential Sources of Exposure

Figure 1
Ventilated torch

- Lead fumes are emitted during the manual burn welding process. This is a minimal source of exposure for through the partition (TTP) welding.
- Exposure to lead may occur from manual handling of burning jigs or contaminated dams.
- High lead exposure may occur when repairing batteries.
- Contaminated air from other areas may be exhausted into the work station as a result of exhausting too much air from a other workstations.
- Lead particles may become airborne if the pressure of the torch flame is too high.

Possible Engineering and Work Practice Controls

- Use local exhaust ventilation around the torch or provide a portable welder exhaust hood on a monorail or other configuration connected to a suitable exhaust collection system (Figure 1).
  - Post burning, portable tool exhaust
  - Post tacking, portable hood
  - Post/intercell burning, backdraft hood
- Use a plastic or glass see-through guard between the breathing zone and the conveyer carrying the battery.
- Use canopy or slot hoods if lead pots are used.
- Use a down draft or slot hood ventilated workstation when performing battery assembly (Figure 1).

Safety and Health Topics Page
Oxide and Grid Processing
Plate Processing
Battery Assembly
Stacking
Group Burning
Intercell Welding and Post Burning
Formation
Battery Repair and Reclaim
Environmental Controls
Maintenance
Engineering Controls
OSHA Lead Requirements...
Source Identification Protocol

- Install a laminar flow (supplied-air) island above workstation.
- Keep torch hose lengths to a minimum to prevent employee from working outside the ventilated area.
- Keep burning temperatures low by substituting air-propane or air-MAP gas for oxy-acetylene flames.
- Provide adequate PPE, a change of clothes, and shower rooms (see OSHA Lead Requirements for PPE, Housekeeping, and Hygiene Facilities).

Possible Engineering and Work Practice Controls

- Ensure ventilation is working properly.
- Perform battery repair at a ventilated workstation.
- Vacuum oxide spills immediately with a central vacuum system or HEPA vacuum.
- Avoid pointing torch flame into battery containers whenever possible.

back to top

Lead Battery Manufacturing

Battery Assembly > Formation

In the dry charge (plate) formation process, the first step, called tacking consists of plates being placed in a tank and lead bars being welded, or "tacked" on. Battery plates are then formed (or charged) in tanks. The major source of lead exposure in the formation process comes from lead fumes. Wet (case) formation does not include any associated lead exposures during formation because batteries are assembled and filled with acid prior to charging.

Batteries being charged in the wet formation process

Formation

Potential Sources of Exposure

- Lead fumes are emitted from using a torch to weld lead.
- High exposure to lead may occur from moving plates in and out of acid tanks, drying ovens, and racks.
- Exposure to acid splash or mist may occur when placing the plates in the acid tanks.
- Lead dust may become airborne during the cleaning of panel lugs using brushes.

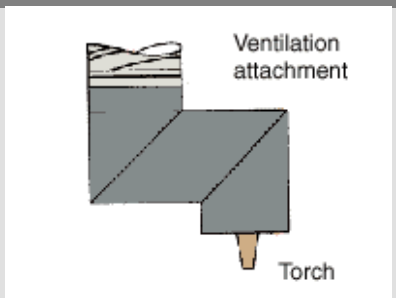

View larger image of exhaust ventilated torch

Figure 1
Formation area

Possible Engineering Controls

- Use local exhaust ventilation on the torch.
  - Post burning, portable tool exhaust
- Cover and ventilate tanks while tacking.
- Use the "tackless formation" process.
- Provide adequate PPE, a change of clothes, and shower rooms (see OSHA Lead Requirements for PPE, Housekeeping, and Hygiene Facilities).

Possible Work Practice Controls

- Ensure ventilation is working properly.
- Wet down plates before they are put into the system.
- Use fork lifts to move groups in and out of drying ovens.
- Use instruments to move plates in and out of tanks.
- Vacuum racks and ovens before moving plates.
- Keep floors around ovens, racks, and storage areas clean.

back to top

Safety and Health Topics Page
Oxide and Grid Processing
Plate Processing
Battery Assembly
Stacking
Group Burning
Intercell Welding and Post Burning
Formation
Battery Repair and Reclaim
Environmental Controls
Maintenance
Engineering Controls
OSHA Lead Requirements...
Source Identification Protocol

Lead Battery Manufacturing

Battery Repair and Reclaim

Battery repair operations repair and salvage defective batteries. Reclaim operations involve recycling scrap grids, plates, and straps.

- Battery Repair
- Reclaim

View larger image of scrap pot and dross hood diagram

Safety and Health Topics Page

Oxide and Grid Processing

Plate Processing

Battery Assembly

Battery Repair and Reclaim

Battery Repair

Reclaim

Environmental Controls

Maintenance

Engineering Controls

OSHA Lead Requirements...

Source Identification Protocol

Lead Battery Manufacturing

Battery Repair and Reclaim > Battery Repair

Defective batteries are repaired and salvaged. The plate groups are tested and reused when possible. Groups are removed by sawing or cutting the covers off the battery, breaking or burning the intercell connectors, and removing the groups.

The major source of lead exposure in the battery repair process comes from lead oxide which can become easily airborne.

Battery Repair

Potential Sources of Exposure

Figure 1
Keep areas vacuumed

- While removing plates, the operator, if not careful, may spill oxide out of the battery case, bang the dry plates together or against the case causing contaminates to become airborne.
- High levels of lead fumes are generated when flames are put in contact with lead.
- Moving groups in and out of battery cases may cause a bellows effect. The bellows effect will release lead particulates at the workstation.
- Contamination may occur from improper storage of battery parts.

Possible Engineering Controls

- Provide local slot or downdraft ventilation at work stations.
- Put a vacuum drop at workstations used for battery repair and salvage.
- Use local exhaust ventilation on torch.
  Post burning, portable tool exhaust
- Provide ventilation in areas for storage of tools, plates, and supplies.
- Use air-propane or air-MAP gas instead of air-acetylene flame for torches.
- Use a laminar flow (supplied-air) island.

Possible Work Practice Controls

- Make sure ventilation is working properly around sawing areas.
- Keep area vacuumed.
- Clean up oxide spills immediately (see Figure 1).
- Use a ventilated scrap barrel for disposal of elements.
  Scrap handling, barrel/drum exhaust hood

Safety and Health Topics Page

Oxide and Grid Processing

Plate Processing

Battery Assembly

Battery Repair and Reclaim

Battery Repair

Reclaim

Environmental Controls

Maintenance

Engineering Controls

OSHA Lead Requirements...

Source Identification Protocol

- Place, do not throw, elements into the scrap barrel.
- Cover barrel with plastic before moving.
- Open the container and disassemble it in a ventilated work area.
- Use caution while removing plates from the battery case.
- Remove plates cautiously to prevent a bellows effect.
    - If a bellows effect occurs, vacuum up particulates immediately with a central vacuum system or HEPA vacuum.
- Do not store materials on active work surfaces; they may interfere with ventilation.
- Provide adequate PPE, a change of clothes, and shower rooms (see OSHA Lead Requirements for PPE, Housekeeping, and Hygiene Facilities).

back to top

| Oxide and Grid Processing | Plate Processing | Battery Assembly | Battery Repair and Reclaim |
| Environmental Controls | Maintenance | Engineering Controls | OSHA Requirements |

eTools Home : Battery Manufacturing

Scope | References | Glossary | Viewing / Printing Instructions | Credits

Lead Battery Manufacturing

Battery Repair and Reclaim > Reclaim

Reclaim operations involve recycling scrap grids, plates, and straps. In any plant, reclaim operations must be isolated from the rest of the plant. Two different processes are used: dry reclaim and wet reclaim.

In dry reclaim the scrap material is re-melted in a lead pot, dross is removed, and lead ingots poured.

Wet reclaim operations involve preliminarily separating the paste from the plates and concentrating the paste before reprocessing the materials by re-melting and pouring ingots. Note: Wet lead should never be added to a heated lead pot.

The major source of lead exposure in the reclaim process comes from lead oxide which can become easily airborne.

Bag house and stack for plant vacuum and dust collection system

- Dry Reclaim
- Wet Reclaim

Dry Reclaim

Potential Sources of Exposure

- When barrels are dumped, or spilled, leaded material may become airborne.
- Handling any leaded materials may contaminate clothing or result in airborne exposure.
- During transportation, materials may spill or come in contact with employees.
- Oxide spills may contaminate equipment and barrels.
- Lead pots may emit high levels of lead fume and operators may be exposed during dumping and drossing.
- The handling of material or dross may cause lead fume emissions and expose the operator.
- Pig pouring may increase exposure to the operator if the area in not ventilated.

Figure 1
Water wash-down

Figure 2
Exhaust for transfer point

Safety and Health Topics Page

Oxide and Grid Processing

Plate Processing

Battery Assembly

Battery Repair and Reclaim

Battery Repair

Reclaim

Environmental Controls

Maintenance

Engineering Controls

OSHA Lead Requirements...

Source Identification Protocol

Possible Engineering Controls

Figure 3
Keep floors clean

- Use ventilated conveying systems, ventilated barrel dumper, or front end loader instead of loading the melting pot manually.
- Use automatic equipment for drossing.
- Use exhaust ventilation for the melting pots, drossing operations, and ingot casting operations.
- Isolate reclaim operations from other plant operations.
- Provide exhaust ventilated scrap barrels at workstations.
  Scrap handling, re-melt pot plus slag/dross/skim hood
- Exhaust all transfer points (see Figure 2) and reclaim processes (that is, manual transfer to conveyor, storage hopper, and barrel dumper).

Figure 4
Manual drossing

Possible Work Practice Controls

- Ensure ventilation is working properly.
- Cover all containers of scrap material being transported.
  Scrap handling, barrel/drum exhaust hood
- Ensure that all scrap is dry before dumping it into a melting pot.
- Vacuum all spills immediately using a central vacuum system or a HEPA vacuum.
- Keep the area clean.
- Use dust suppression techniques including keeping floors wet, using dust suppression compounds, or vacuuming.
- Clean all drums after dumping.
- Avoid splashing lead during pouring.
- If a torch is used in cleaning up splashed lead, use local exhaust ventilation to avoid breathing fumes.
- Keep water away from the melt pot to minimize the potential for an explosion caused by water being trapped under molten metal.
- Use long handled tools when possible.
- Provide adequate PPE, a change of clothes, and shower rooms (see OSHA Lead Requirements for PPE, Housekeeping, and Hygiene Facilities).

back to top

Wet Reclaim

Potential Sources of Exposure

Figure 5
Exhaust melting pot

- Splashes of oxide on floors and equipment may dry and become airborne.
- Handling leaded material increases risk of exposure.
- During the transport of lead oxide material, lead particles may become airborne.
- Paste spills dry and may become airborne.
- Dumping dried lead oxide and dross causes lead pot emissions.
- Handling dross may increase the operator's exposure to lead fumes.
- Pig pouring may increase the operator's exposure to lead.

Possible Engineering Controls

- Use ventilated conveying systems, ventilated barrel dumper, or front end loader instead of loading the melting pot manually (see Figure 5).
- Use automated equipment for drossing
- Exhaust ingot casting operations
- Exhaust all transfer points (see Figure 3) and reclaim processes such as manual transfer to conveyor, storage hopper, and barrel dumper
- Cover and exhaust all moving equipment that comes in contact with wet or dry paste
- Isolate the reclaim operations from other plant operations
- Provide screening or curtains to contain splatter
- Provide exhaust ventilated scrap barrels at workstations
  - Scrap handling, re-melt pot plus slag/dross/skim hood

Possible Work Practice Controls

- Work practice controls are the same as those in Dry Reclaim.
- Ensure that all scrap is dry before dumping into a melting pot
  - Dross formed from melting mixed alloys containing Ca, Al, As, and Sb may form hazardous gases such as arsine and stibine if the dross becomes wet.

back to top

Lead Battery Manufacturing

Environmental Controls

Employees may be exposed to lead while servicing and maintaining environmental controls.

- Waste Water Treatment
- Dust Collection Systems

Bag House

Safety and Health Topics Page
Oxide and Grid Processing
Plate Processing
Battery Assembly
Battery Repair and Reclaim
Environmental Controls
Waste Water Treatment
Bag House
Maintenance
Engineering Controls
OSHA Lead Requirements...
Source Identification Protocol

Lead Battery Manufacturing

Safety and Health Topics Page

Oxide and Grid Processing

Plate Processing

Battery Assembly

Battery Repair and Reclaim

Environmental Controls

Waste Water Treatment

Bag House

Maintenance

Engineering Controls

OSHA Lead Requirements...

Source Identification Protocol

Environmental Controls > Waste Water Treatment

Normally, employees are not exposed to hazardous levels of airborne lead contaminants while servicing and maintaining waste water treatment systems. However, while handling lead-bearing wastes, sludge, and filters employees may come in contact with lead-containing wastes.

Waste water

Waste Water Treatment

Potential Sources of Exposure

- Liquid lead waste may splash on equipment and become airborne if it dries and becomes disturbed.
- Employees may contact leaded waste products while removing and transporting recovered lead, filter cake, or sludge.
- Employees may contact lead-containing materials during maintenance, repair and cleanup operations.

Figure 1
Waste water treatment area

Possible Engineering and Work Practice Controls

- Ensure that appropriate PPE is provided and used when handling leaded materials.
- Transfer recovered lead in covered or closed containers.
- Clean up spills and water mists, when necessary, to prevent leaded materials from drying.

back to top

Lead Battery Manufacturing

Safety and Health Topics Page

Oxide and Grid Processing

Plate Processing

Battery Assembly

Battery Repair and Reclaim

Environmental Controls

Waste Water Treatment

Bag House

Maintenance

Engineering Controls

OSHA Lead Requirements...

Source Identification Protocol

Environmental Controls > Bag House

Air exhausted from ventilation systems is vented to cyclones, scrubbers, and bag houses for particulate removal. Dust must be removed from the separator (air pollution control equipment) and transported to storage, recycle streams, or to off-plant receivers. Dust collection systems can be a significant source of lead exposure if not properly operated, cleaned, and maintained.

Bag House

Potential Sources of Exposure

Figure 1
Bag house

- Employees are at high risk of overexposure to lead dust:
  - While cleaning and maintaining dust collection systems (cyclones and bag houses).
  - While handling and transporting materials that were removed from dust collection systems (cyclones and bag houses).
  - While working near improperly maintained dust collection systems.

Possible Engineering and Work Practice Controls

- Enclose or cover containers used to transport lead from dust collection systems.
  - Dry Type Dust Collectors Dust Disposal
  - Dry Type Dust Collectors Discharge Valves 1
  - Dry Type Dust Collectors Discharge Valves 2
- When working on or entering ventilation or dust-control equipment for maintenance or cleaning, implement proper permit required confined space entry and energy-control procedures.
- Use appropriate Personal Protection Equipment.
- Ensure that dust-control equipment is designed, operated, and maintained properly on a scheduled basis to prevent breakdown and release of lead to the ambient environment.
  - Dust Control Handbook: Fabric Collectors. OSHA, Bureau of Mines, and the U.S. Department of the Interior (1987, February), 29 pages. This section discusses how baghouses work, types of baghouses, advantages and disadvantages of each type, common operating problems and solutions, startup and shutdown procedures, and preventive maintenance procedures.
- Do not vent combustion gasses to bag houses because the moisture in their gasses will clog the filter materials.

back to top

Lead Battery Manufacturing

Safety and Health Topics Page

Oxide and Grid Processing

Plate Processing

Battery Assembly

Battery Repair and Reclaim

Environmental Controls

Maintenance

Engineering Controls

OSHA Lead Requirements...

Source Identification Protocol

Maintenance

Maintenance personnel are at risk of exposure to lead fumes and dust during maintenance operations involving equipment that is contaminated with lead. Appropriate PPE should be provided and work practices should be followed when performing maintenance on this equipment. There are recommended engineering and work practice controls to minimize employee exposure in the following situations:

- Maintaining or Moving Contaminated Equipment
- Working in Shops
- Preventive Maintenance Program

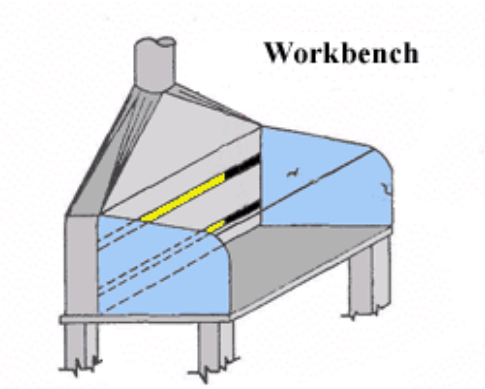

View larger image of workbench diagram

Maintaining or Moving Contaminated Equipment

Potential Source of Exposure

- Maintenance shop personnel may be exposed to lead dust when servicing and handling equipment that is contaminated with lead.

Possible Engineering and Work Practice Controls

- Decontaminate equipment prior to servicing by vacuum, water spray, or mechanical removal such as scraping or brushing in conjunction with local exhaust ventilation.

back to top

Working in Shops

Potential Source of Exposure

- Exposure to lead may occur when working on contaminated equipment in the maintenance shop. (Figure 1)

Possible Engineering and Work Practice Controls

- Provide exhaust ventilation with HEPA filters.
  - Moveable Exhaust Hood Diagram
  - Work Bench Diagram
- Decontaminate equipment using vacuum, water spray, or mechanical

Figure 1
Maintenance shop

removal such as scraping or brushing in conjunction with local exhaust ventilation.

- Provide low volume and high velocity ventilated hand tools.
  Typical System Low Volume/High Velocity Diagram
  Hood for Cup Type Surface Grinder and Wire Brushes

- Provide Laminar Flow (Supplied Air) Islands at work stations.
  Supplied Air Island Diagram

- Provide wash-up sink for employees in the shop.

- Keep surfaces free of lead contamination as much as possible.

- Use local exhaust ventilation on torch.
  Post Burning Exhaust Diagram

- Ensure that all shop vacuums are equipped with HEPA filters capable of removing lead.

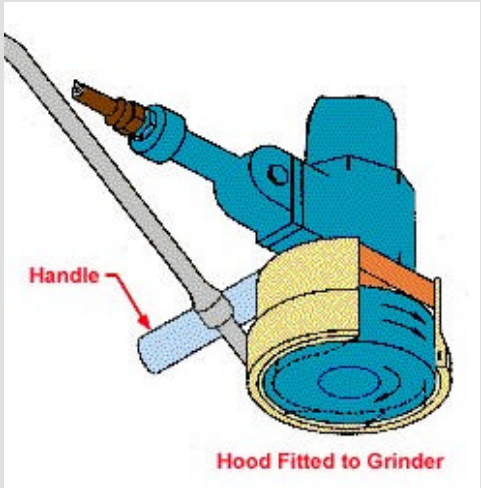

View larger image of surface grinder and wire brush hood diagram

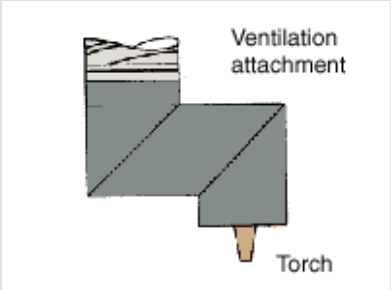

View larger image of post burning exhaust diagram

- Empty vacuums in a manner that minimizes the reentry of lead into the shop.

back to top

Preventive Maintenance Program

A well-designed system and a continuing preventive maintenance program are key in preventing and controlling ventilation system problems.

Elements of a Good Maintenance Program

- Establish a safe place to file drawings, specifications, fan curves, operating instructions, and other papers generated during design, construction, and testing.

- Establish a program of periodic inspection.

  - The types and frequencies of inspections depend on the operation of the system and other factors.

    - Daily: Visually inspect hoods, ductwork, access and clean-out doors, blast gate positions, hood static pressure, pressure drop across air cleaner, and verbally communicate with users ("How is the system performing today?").

    - Weekly: Check air cleaner capacity, fan housing, pulley belts.

    - Monthly: Check air cleaner components.

- See Example Checklist.

A quick way to check for settled material in a duct is to take a broomstick and tap the underside of all the horizontal ducts. If the tapping produces a "clean" sheet metal sound, the duct is clear. If the tapping produces heavy, thudding sounds, there may be settled dust in the duct.

- Establish a preventive maintenance program.
  - Certain elements of any ventilation system should be checked on a regular schedule and replaced if found to be defective.
  - See Example Checklist.
  - OSHA Technical Manual: Ventilation Investigation. OSHA (1992), 26 pages. This manual describes the use of supply and exhaust ventilation to control emissions, exposures, and chemical hazards in the workplace.
- Provide worker training.
  - Workers need to be trained about the purpose and functions of the ventilation system. For example, they need to know how to work safely and how to best use the ventilation system. Exhaust hoods do little good if the welder does not know that the hood must be positioned close to the work.
- Keep written records.
  - Maintain written documentation, not only of original installations but also of all modifications as well as problems and resolutions.

back to top

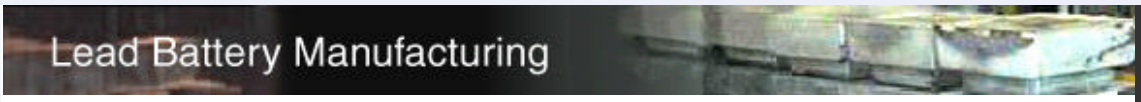

Maintenance > Checklist for Local Exhaust Ventilation System

The following checklist is provided as a guideline to assist with the materials needed and areas to check for an effective preventive maintenance program of ventilation systems in Battery Manufacturing plants.

Evaluation Equipment

- Paper, pencil, recording devices
- Smoke tubes, candles
- Velometerr
- Pilot tube, manometer, hoses
- Drill, bits
- Tape measure
- Flashlight
- Ladder
- Rags
- Watch
- RPM meter
- Sound level meter
- Volt/amp meter

Previously Recorded Data

- Original design specifications and drawings
- Original operating conditions
- Modifications
- Past inspection reports
- Persons to contact
- Maintenance schedule
- Controls
- Lockout provisions
- Compliance inspections
- Exposure monitoring records
- Injury and illness history

Employee contact

- Complaints
- Suggestions
- Observed work practices
- Interaction with control
- Interaction with emission source
- Training
- Use of personal protective equipment (PPE)

Ductwork

- Physical integrity
- Plugging and blockage
- Transport velocities
- Duct material
- Changes since last inspection
- Blast gate and damper settings

Air Cleaner

- Physical integrity
- Static pressure drop
- Waste stream handling
- Maintenance and operation
- PM program followed

Fan

- Direction of rotation
- RPM
- Pulleys, belts
- Access doors
- Fan wheel
- Fan housing
- Flexible coupling
- Inlet/outlet
- Stack weather head
- Bearings
- Vibration and noise
- Fan SP/fan TP

Fan Motor

- RPM
- Rated HP
- Amperage
- Actual BHP
- Drive train
- Temperature
- Weather protection

Cooperation

Vibration

Emission Source

Location of emissions
Rates of emission
Chemical characteristics
Physical characteristics
Employee exposure levels
Environment

Hood

Type (enclosure, receive, capture)
Capture velocity
Face velocity
Performance during normal operation
Performance during abnormal operation
Compatibility with work requirements
Physical integrity
competing air currents
Hood static pressure
Hood entry loss

Replacement Air

Same CFM as exhaust
Force on doors
Drafts at exterior walls
Inlets
Heat/cooling source
Distribution
Interference with capture velocity
Back-up system
Monitoring or warning system

Measurement and Calculations

Hood static pressure
Capture velocity
Face velocities
Duct diameters, lengths
Duct transport velocities
Temperature, pressure
Flow rates
Fan SP/fan TP
Fan RPM
Motor RPM
Motor amps
System static pressure

Checklist provided courtesy of Jeff Burton, as found in Industrial Ventilation, A Self-Directed Learning Workbook, Checklist No. 8.

Lead Battery Manufacturing

Engineering Controls

The following engineering controls are effective means of lowering both in-plant lead exposure and lead emissions to the outside environment:

- Local Exhaust Ventilation Diagrams
- Laminar Flow (Supplied Air) Islands
- Central Vacuum System
- Flow charts
  - Battery Manufacturing Process Flow Chart, Wet (Jar) Formation
  - Battery Manufacturing Process Flow Chart, Dry Charge (Tank) Formation
  - Battery Manufacturing Process Flow Chart, Concast/Wet (Jar) Formation
  - Battery Manufacturing Process Flow Chart, Expanded Metal/Wet (Jar) Formation

View larger image of a supplied air island

Safety and Health Topics Page
Oxide and Grid Processing
Plate Processing
Battery Assembly
Battery Repair and Reclaim
Environmental Controls
Maintenance
Engineering Controls
Local Exhaust Ventilation Diagrams
Laminar Flow (Supplied Air) Islands
Central Vacuum System
OSHA Lead Requirements...
Source Identification Protocol

Lead Battery Manufacturing

Engineering Controls > Local Exhaust Ventilation Diagrams

Oxide Production

- Gas fired lead pot, canopy hood
- Oxide drum filling, local exhaust ventilation
- Oxide barrel filling, local exhaust ventilation

Oxide Conveyance and Classification

- Conveyor Belt Ventilation Diagram
- Belt Conveying Head Pulley Diagram
- Conveyor Belt Loading Diagram
- Screw Conveyor Components
- Drag link Conveyor Configuration Diagram #1
- Drag link Conveyor Configuration Diagram #2

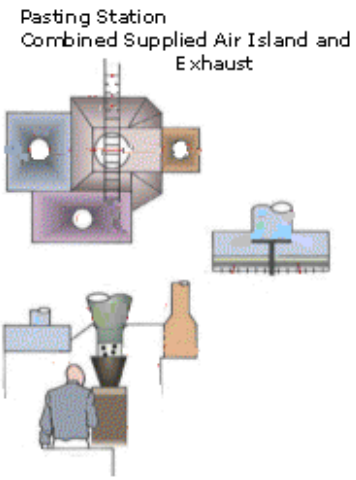

View larger image of pasting station, supplied air island diagram

Paste Mixing

- Paste mixing testing station
- Paste mixer, dual mixer emission controls, Part A
- Paste mixer, dual mixer emission controls, Part B

Grid Production and Parts Casting

- Lead pot and dross hood Part A
- Lead pot and dross hood Part B
- Ventilated torch

Pasting

- Scrap handling, barrel/drum exhaust hood
- Pasting station, supplied air island
- Integrated controls, plate take-off
- Integrated controls, plate take-off Part A
- Integrated controls, plate take-off Part B
- Integrated controls, plate take-off Part C
- Integrated controls, plate take-off Part D
- Plate storage rack hood
- Pasting take-off, work station hood
- Test station ventilation

Parting

- Parting Station, Band Saw Ventilation
- Scrap handling, barrel/drum exhaust hood

Safety and Health Topics Page
Oxide and Grid Processing
Plate Processing
Battery Assembly
Battery Repair and Reclaim
Environmental Controls
Maintenance
Engineering Controls
Local Exhaust Ventilation Diagrams
Laminar Flow (Supplied Air) Islands
Central Vacuum System
OSHA Lead Requirements...
Source Identification Protocol

Enveloping and Wrapping

- Plate wrapping station
- Scrap handling, barrel/drum exhaust hood

Stacking

- Stacking table, single exhaust booth hood
- Stacking, slant stacking station (industrial)
- Plate storage rack hood
- Scrap handling, barrel/drum exhaust hood

Group Burning

- Stacking table, single exhaust booth hood
- Cast on strap (Farmer), total enclosure w/ exhaust
- Cast on strap (Dynacast II), emission controls
- Scrap handling, barrel/drum exhaust hood
- Group drop, tamping/burner hood
- Stack and burn, bench hood
- Tiegal machine, enclosure assembly
- Tiegal anchor, sinking machine
- Post burning, portable tool exhaust

Intercell Welding and Post Burning

- Post burning, portable tool exhaust
- Post tacking, portable hood
- Post/intercell burning, backdraft hood

Formation

- Post burning, portable tool exhaust

Reclaim

- Scrap handling, re-melt pot plus slag/dross/skim hood

Baghouse

- Dry Type Dust Collectors Dust Disposal
- Dry Type Dust Collectors Discharge Valves 1
- Dry Type Dust Collectors Discharge Valves 2

Maintenance

- Moveable Exhaust Hood Diagram
- Work Bench Diagram
- Typical System Low Volume/High Velocity Diagram
- Hood for Cup Type Surface Grinder and Wire Brushes
- Supplied Air Island Diagram
- Post Burning Exhaust Diagram

Supplied Air Island

- Supplied Air Island Diagram
- Pasting station, supplied air island

Central Vacuum System

- Central Vacuum System Diagram
- Plan view of central vacuum system
- Elevation view of central vacuum system
- Schematic view of central vacuum system

Personal Protective Equipment

- Boot Wash Station Diagram
- Shoe Cleaning Machine
- Clothes Cleaning Air Shower Diagram

Housekeeping

- Central Vacuum Diagram
- Vacuum Truck Diagram

Hygiene Facility

- Hygiene facility diagram
- Clothes Cleaning Air Shower Diagram

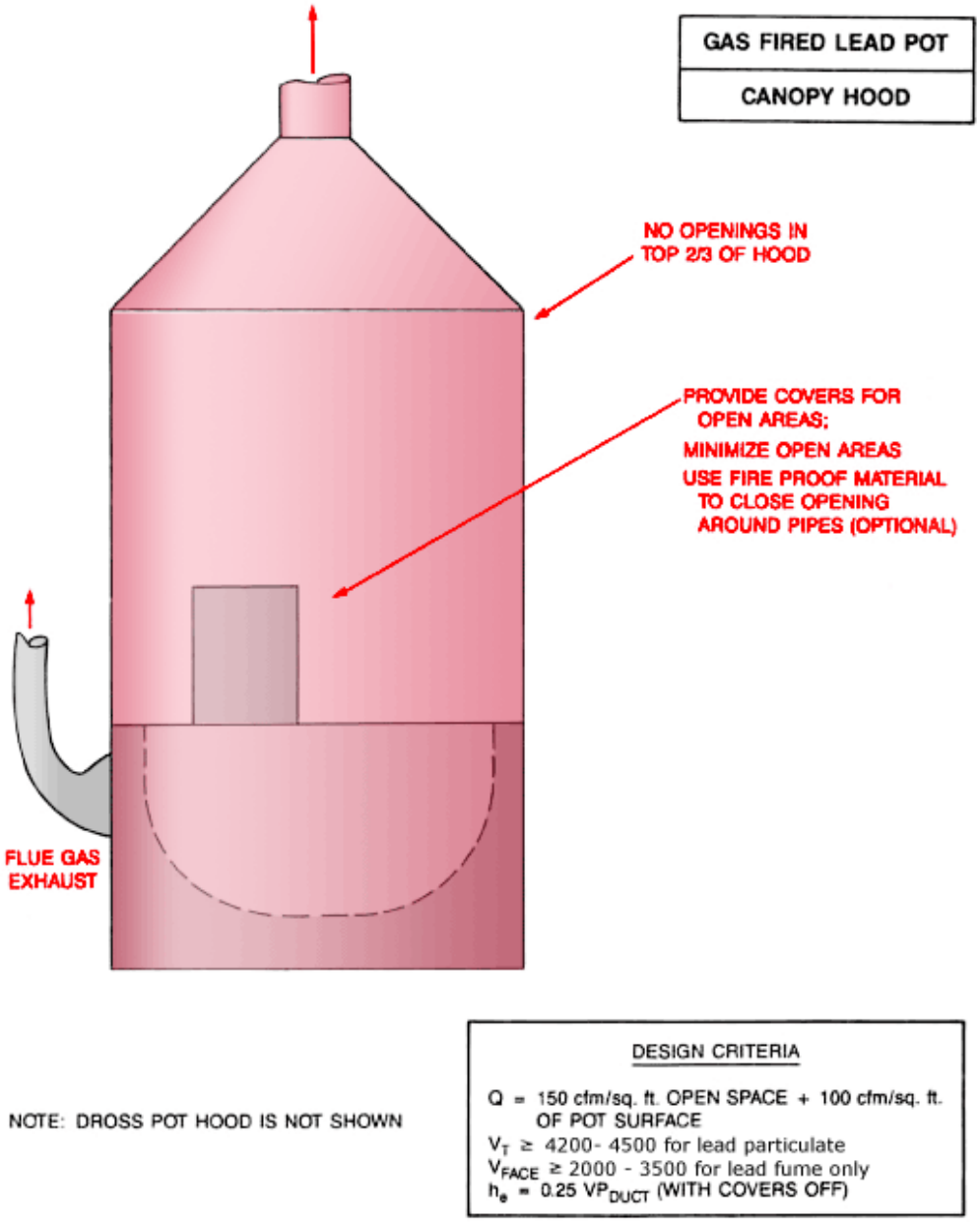

Image of gas fired lead pot, canopy hood

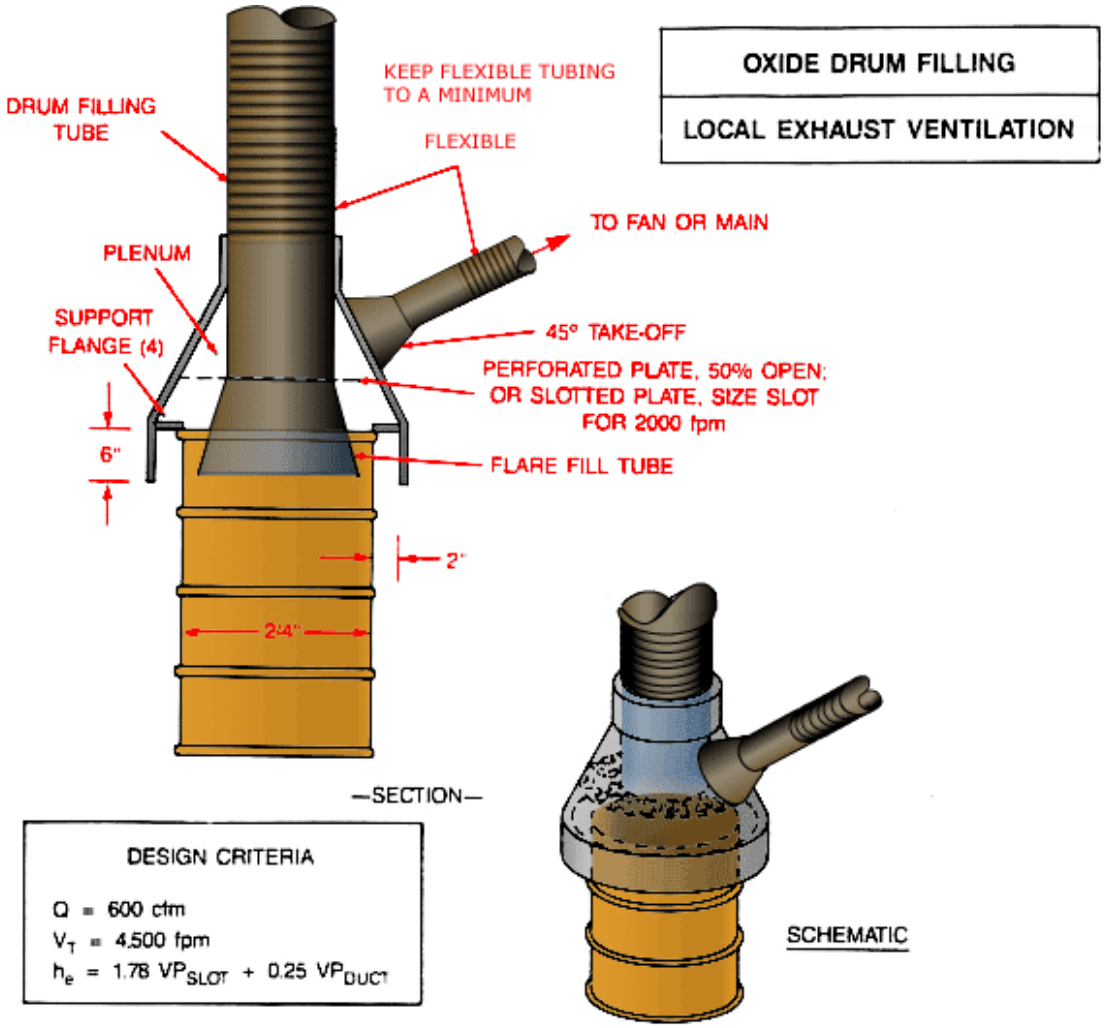

Image of oxide drum filling, local exhaust ventilation

Dross and Skimmings Storage Ventilation

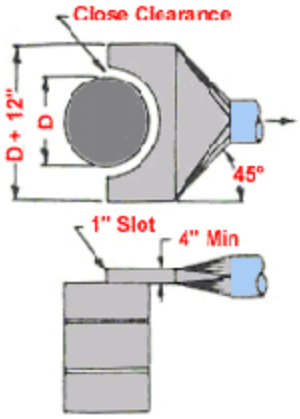

- Q = 100 cfm/sq ft barrel top min
- Duct velocity = 4200 to 4500 fpm
- Entry loss = 0.25 vp + 1.78 slot vp
- Manual loading

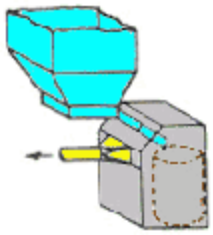

- Q = 150 cfm/sq ft open face area
- Duct velocity = 4200 to 4500 fpm
- Entry loss = 0.25 vp for 45° taper

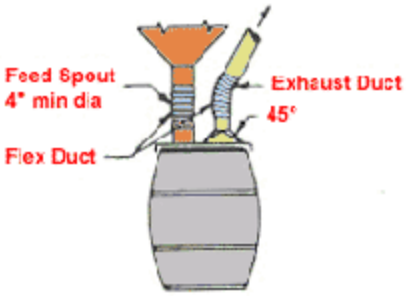

- Q = 50 cfm x drum dia (ft) for weighted lid
  150 cfm x drum dia (ft) for loose lid
- Duct velocity = 4200 to 4500 fpm
- Entry loss = 0.25 vp

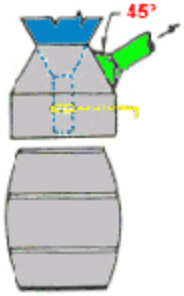

- Q = 300 - 400 cfm
- Duct Velocity = 4200 to 4500 fpm
- Entry loss = 0.25 vp

Image of oxide barrel filling, local exhaust ventilation

Conveyor Belt Ventilation

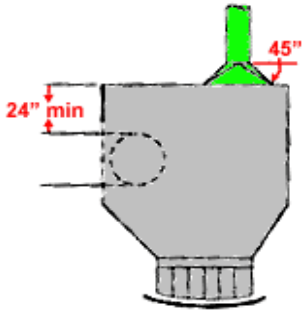

Conveyor transfer less than 3' fall. For greater fall, provide additional exhaust at lower belt. See 3 below.
h_e =0.25 VP_d

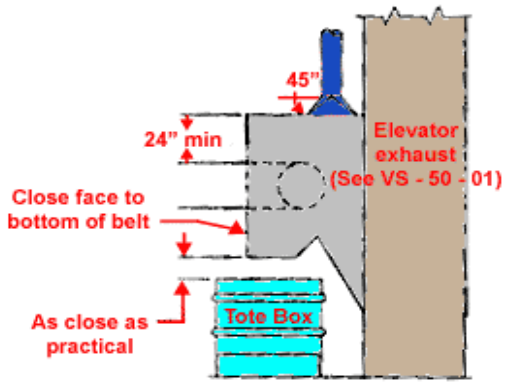

2. Conveyor to elevator with magnetic separator
h_e = 0.25 VP_d

DESIGN DATA

Transfer points:
Enclose to provide 150 - 200 fpm indraft at all openings. (Underground mining tunnel ventilation will interfere with conveyor exhaust systems.)

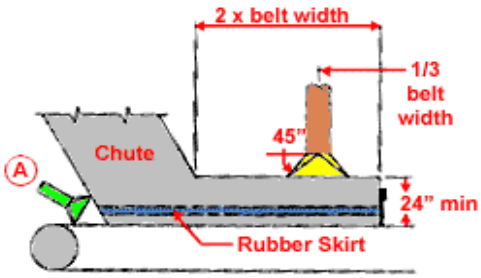

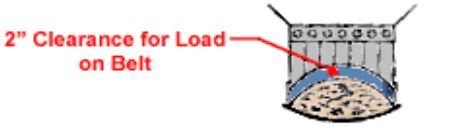

DETAIL OF BELT OPENING

3. Chute to belt transfer and conveyor transfer. greater than 3' fall.
Use additional exhaust at A
for dusty material as follows:
Belt width 12"-36". Q=700 cfm
Belt width above 36". Q=1000 cfm
h_e = 0.25 VP_d

Note: Dry, very dusty materials may require exhaust flowrates 1.5 to 2.0 times stated values

Q = 350 cfm/ft belt width for belt speeds under 200 fpm. (minimum)
= 500 cfm/ft belt width for belt speeds over 200 fpm and for magnetic separators. (minimum)
Duct velocity = 4200 -4500 fpm
h_e = 0.25 V_P

Conveyor belts:
Cover belt between transfer points
Exahaust at tranfer points
Exhaust additional 350 cfm/ft. of belt width at 30' intervals. Use 45 tapered connections.

American Conference of Governmental Industrial Hygienists	Date: 1 - 91
	Figure: VS - 50 - 20

From American Conference of Governmental Industrial Hygienists (ACGIH®), Figure VS-50-20, *Industrial Ventilation : A Manual of Recommended Practice*, 23rd Edition. Copyright 1998. Reprinted with permission.

Image of conveyor belt ventilation diagram

Toxic Material Belt Conveying Head Pulley

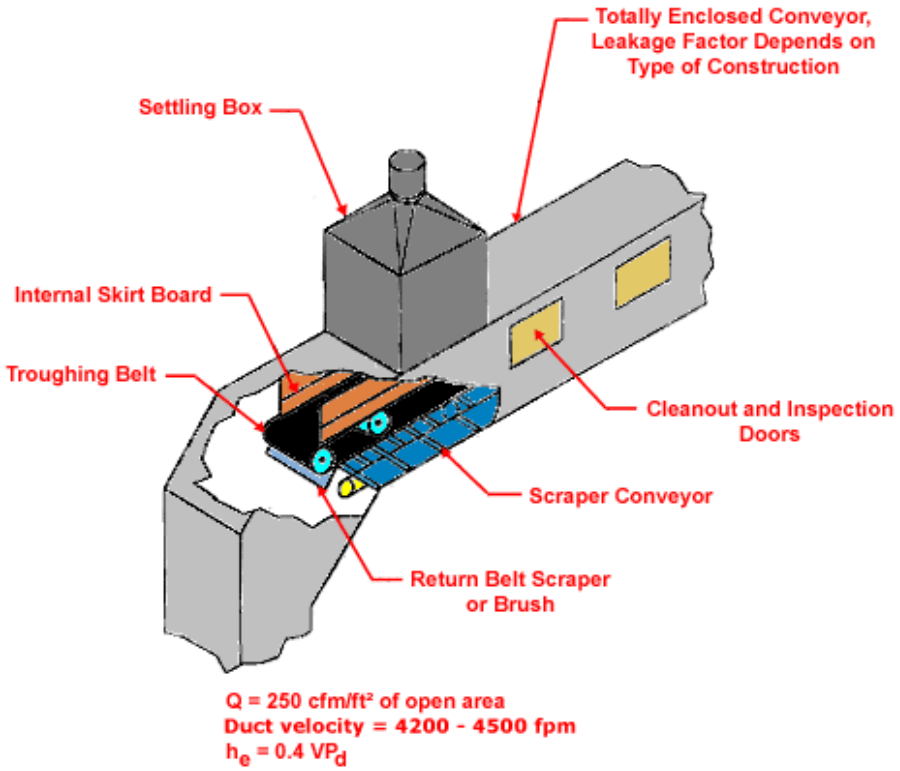

American Conference of Governmental Industrial Hygienists	Date: 1 - 91
	Figure: VS - 50 - 21

From American Conference of Governmental Industrial Hygienists (ACGIH®), Figure VS-50-21, *Industrial Ventilation : A Manual of Recommended Practice*, 23rd Edition. Copyright 1998. Reprinted with permission.

Image of belt conveying head pulley diagram

Toxic Material
Conveyor Belt Loading

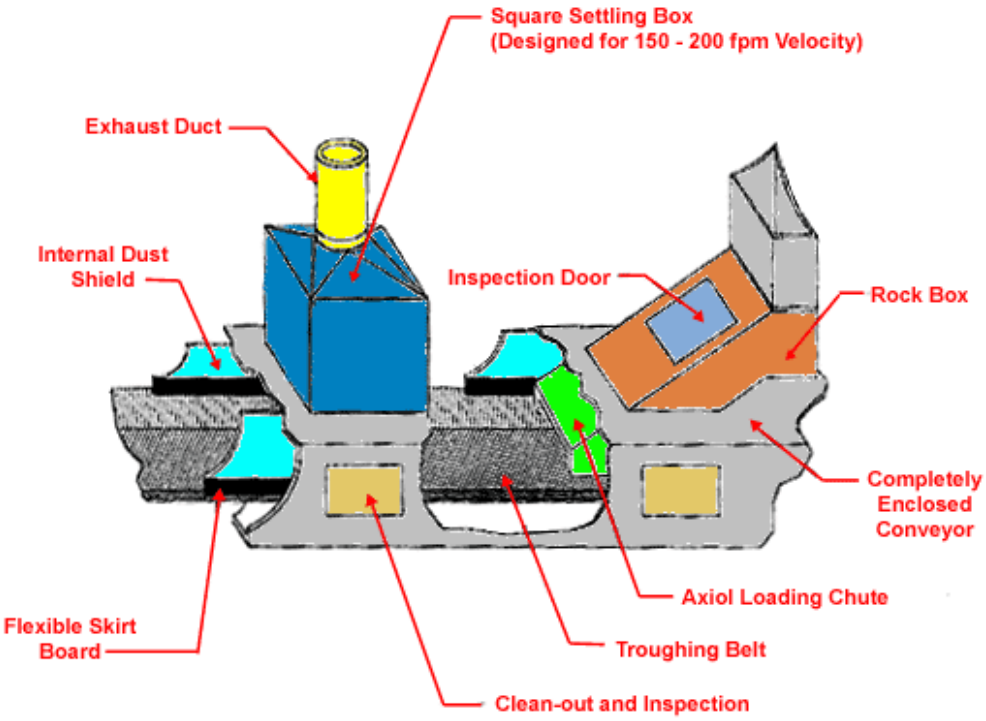

Q = 250 cfm/ft² of open area
Duct velocity - 4200 - 4500 fpm
$h_e = 0.4\ VP_d$

American Conference of Governmental Industrial Hygienists	Date: 1 - 91
	Figure: VS - 50 - 22

From American Conference of Governmental Industrial Hygienists (ACGIH®), Figure VS-50-22, *Industrial Ventilation : A Manual of Recommended Practice*, 23rd Edition. Copyright 1998. Reprinted with permission.

Image of conveyor belt loading diagram

Conveyors -
Screw Conveyor Components

THE CONVEYOR SCREW imparts a smooth positive motion to the material as it rotates within the trough.

COUPLINGS AND SHAFT connect and transmit motion to subsequent screw conveyors. Held in place by self-locking Tem-U-Lac bolts.

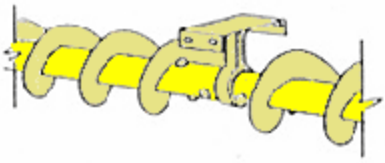

HANGERS provide support, maintain allignment and serve as bearing surfaces.

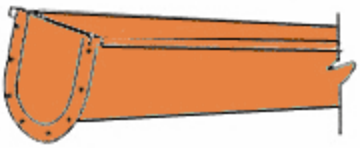

TROUGHS AND CONVEYORS completely enclose the material being conveyed and the rotating parts. Covers are availavle in various types and are secured to the trough by Spring, Screw, Tite Seal or quick acting Barron Clamps depending on the trough being used. Also available as in a tubular configuration withno cover required.

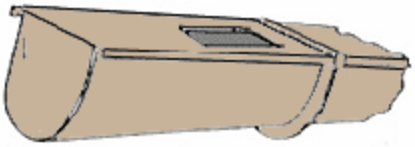

INLET AND DISCHARGE OPENINGS may be located wherever needed, discharge spouts may be without slices or fitted with either flat or curved slides. These slides may be operated by hand, rack and pinion gears, or by power.

Image of screw conveyor components

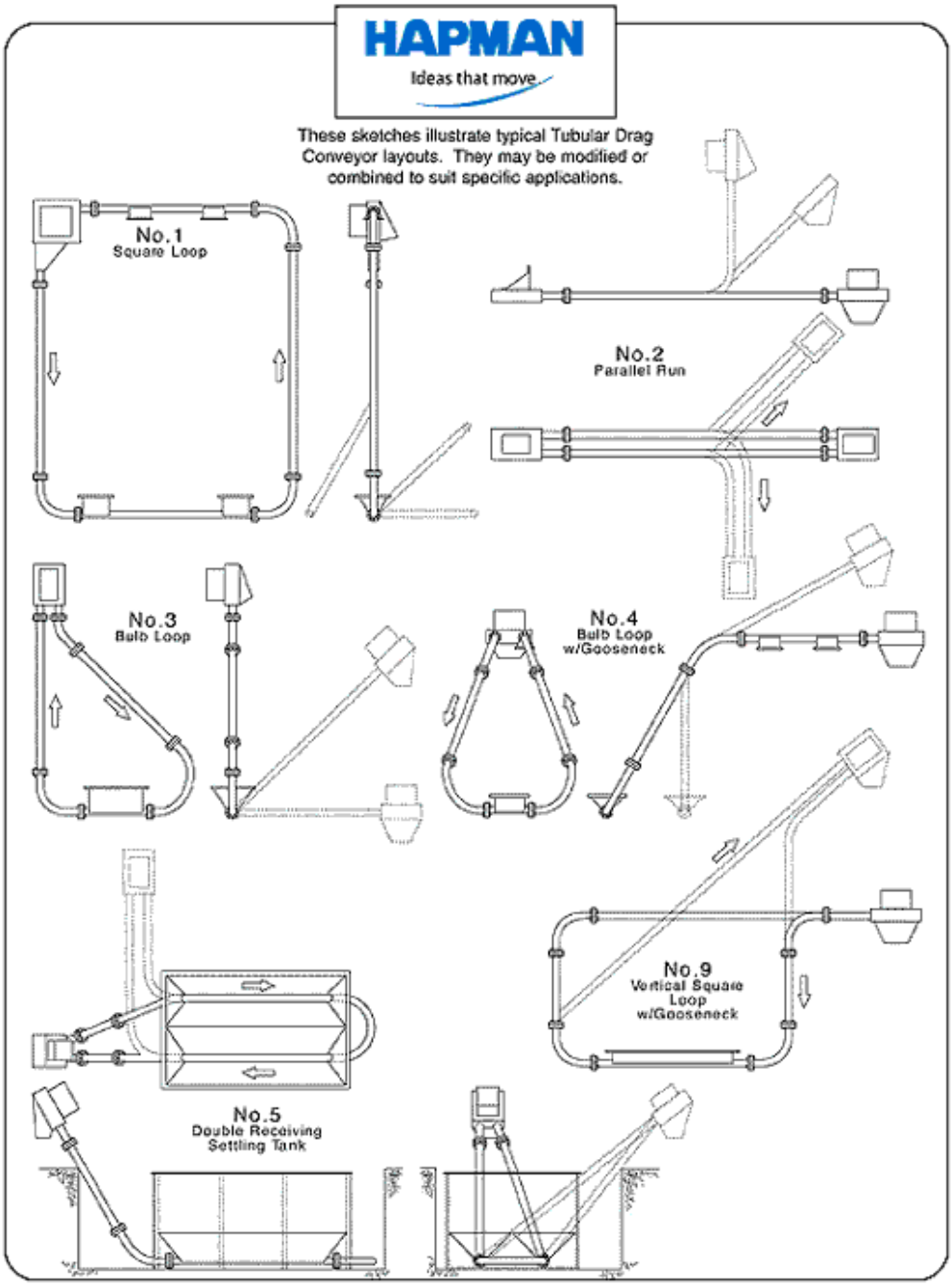

These sketches illustrate typical tubular drag conveyor layouts. They may be modified or combined to suit specific applications

HAPMAN

Ideas that move

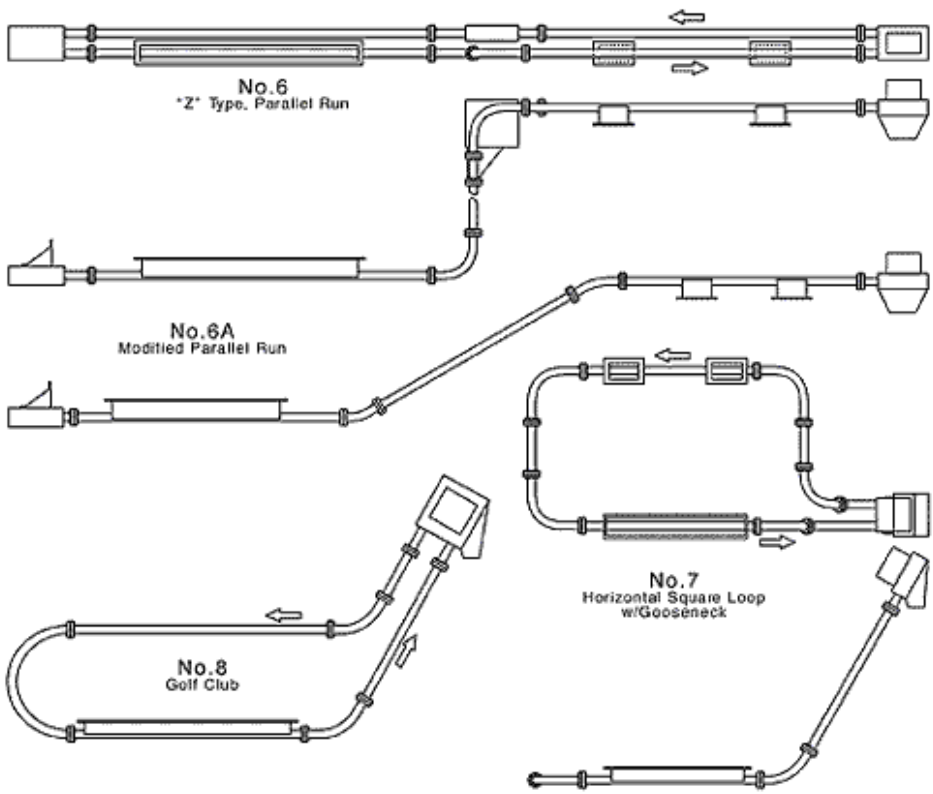

CAPACITY CHART

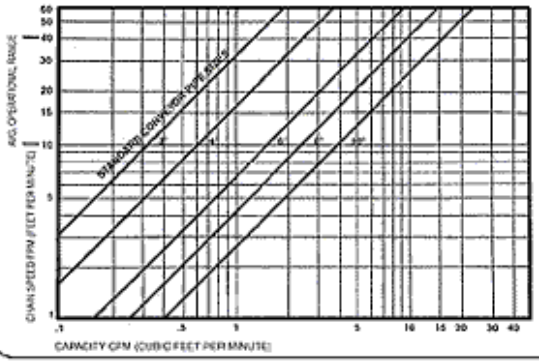

GENERAL DESIGN INFORMATION

STANDARD PIPE SIZES	STANDARD BEND RADII
3'	18"
4"	24"
6"	36"
8"	48"
*10"	60"

Additional receiving and/or discharge hoppers may be specified. Location and details of construction to meet requirements.

* Conveyor circuitry limited.

Hapman
P.O. Box 2321
Kalamazoo, Michigan 49003
269-343-1675 • 800-427-6260 • Fx 269-349-2477
info@hapman.com • www.hapman.com

These sketches illustrate typical tubular drag conveyor layouts. They may be modified or combined to suit specific applications

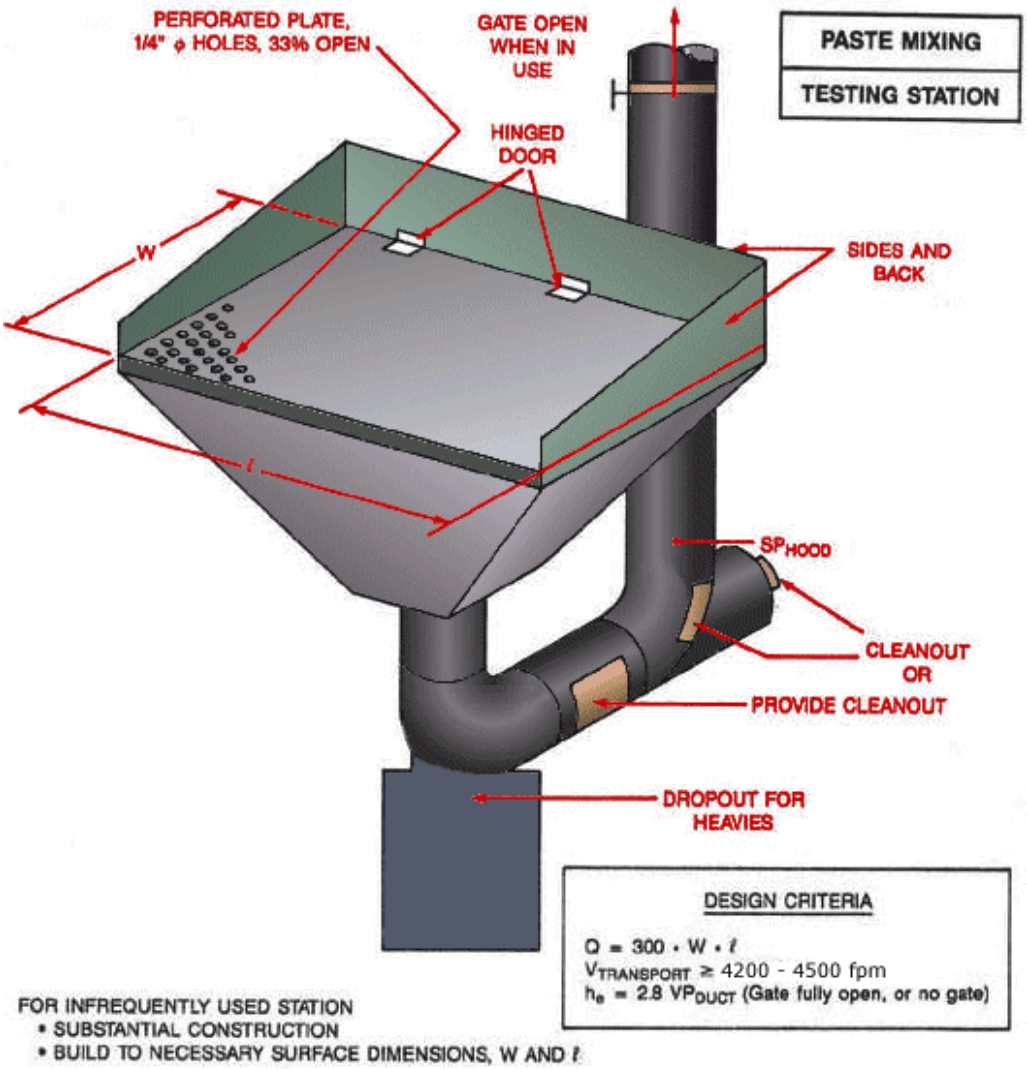

Image of paste mixing, testing station diagram

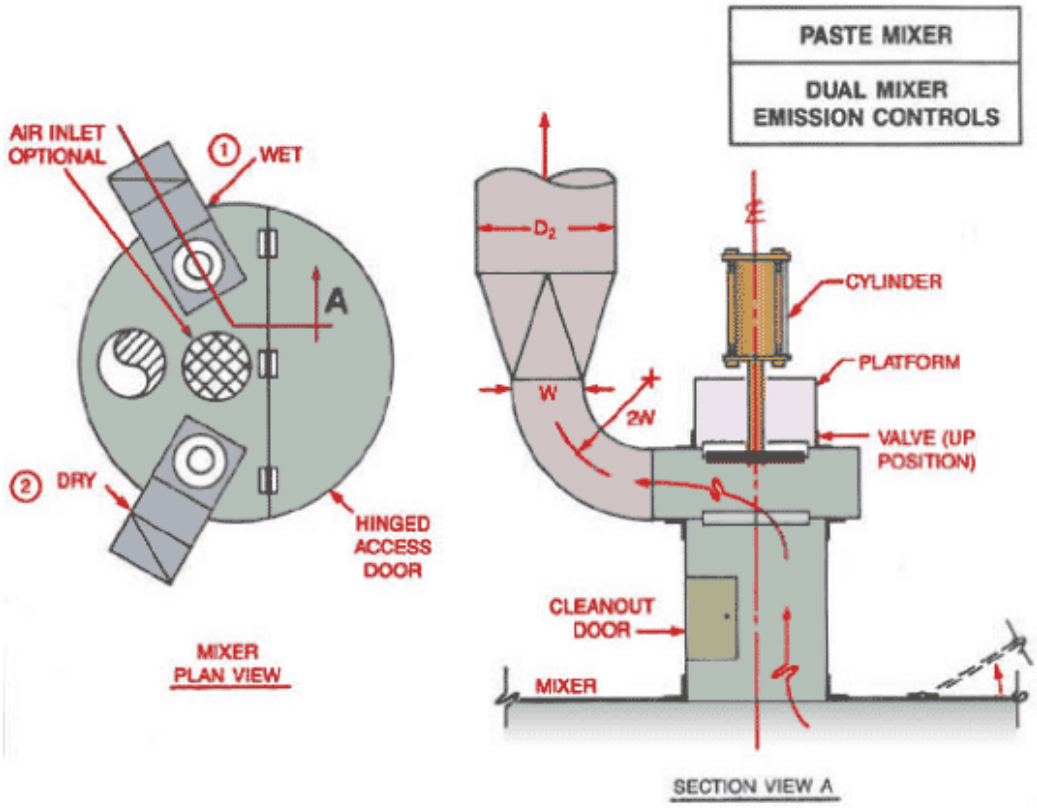

DESIGN CRITERIA

$Q_{MAX.}$ = 400 CFM/SQ. FT. × AREA OF OPEN ACCESS DOOR, SQ. FT.
$V_{TRANSPORT}$ = 4,500 fpm (WHEN ACCESS DOOR OPEN, VALVE IN UP POSITION)
h_e = 1.6 VP_{DUCT} (ACCESS DOOR OPEN, VALVE IN UP POSITION)

NOTE: INSTEAD OF OPENING DOOR FOR AIR INLET ON WET CYCLE, AN OPTIONAL AIR INLET CAN BE INSTALLED.
MANUFACTURERS OF MIXERS SET AIR VOLUME REQUIREMENTS ON MIXER.

Image of paste mixer, dual mixer emission controls, Part A

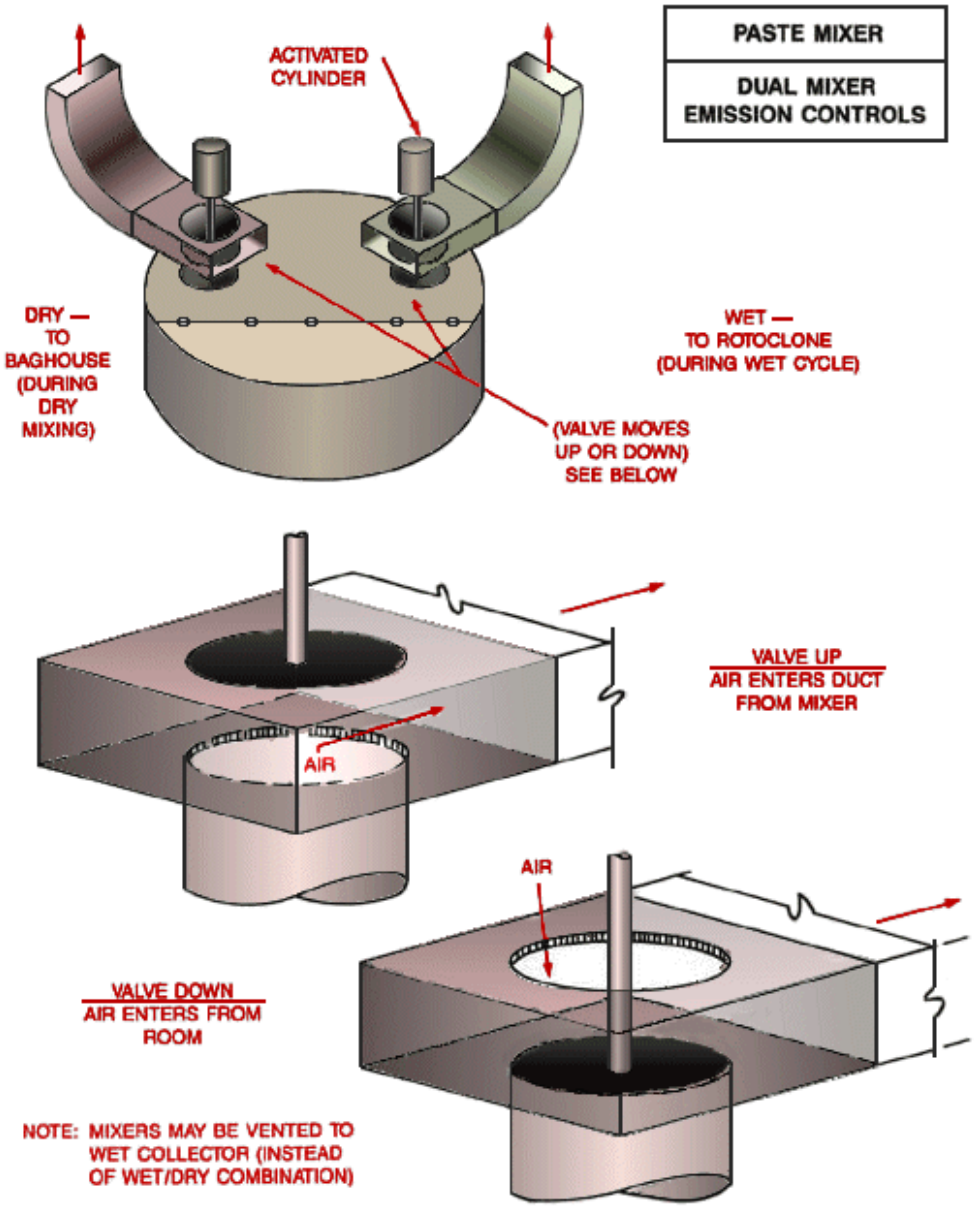

Image of paste mixer, dual mixer emission controls, Part B

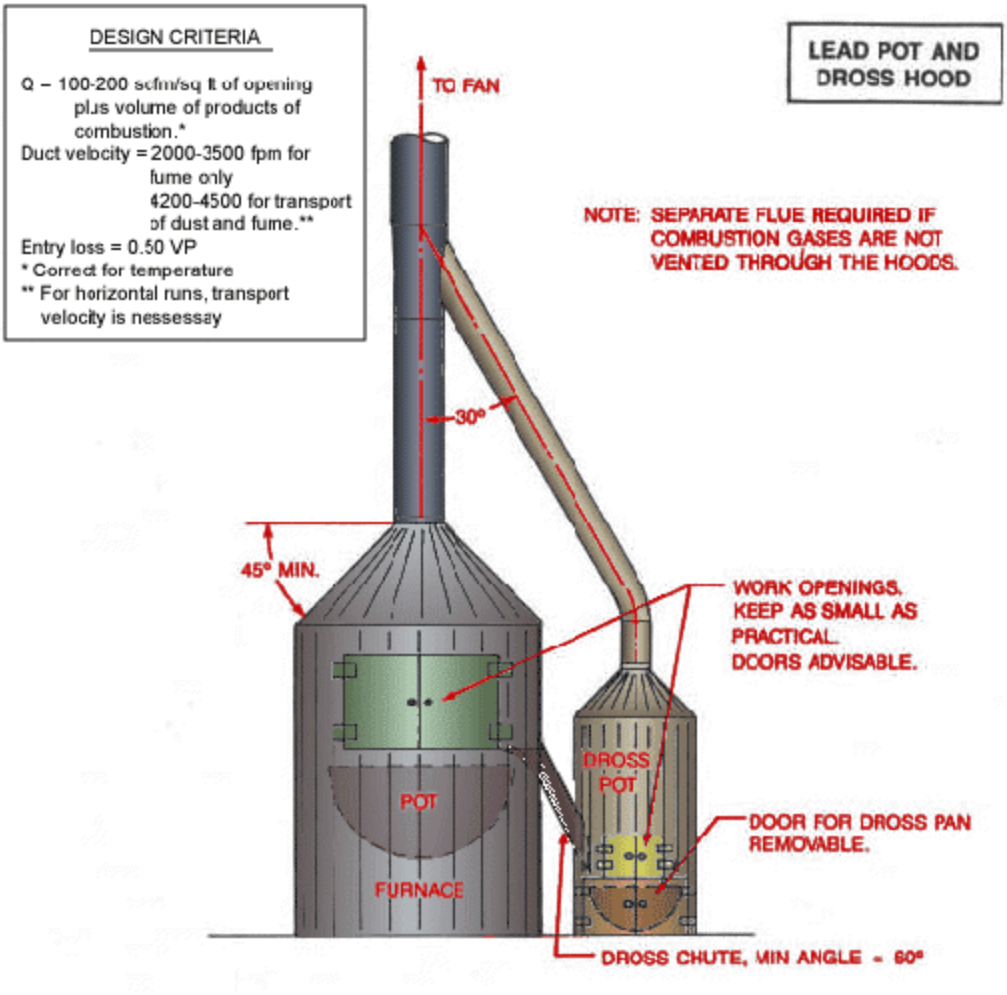

Diagram of lead pot and dross hood

Scrap Handling Remelt Pot and Slag/Dross/Skim Hood

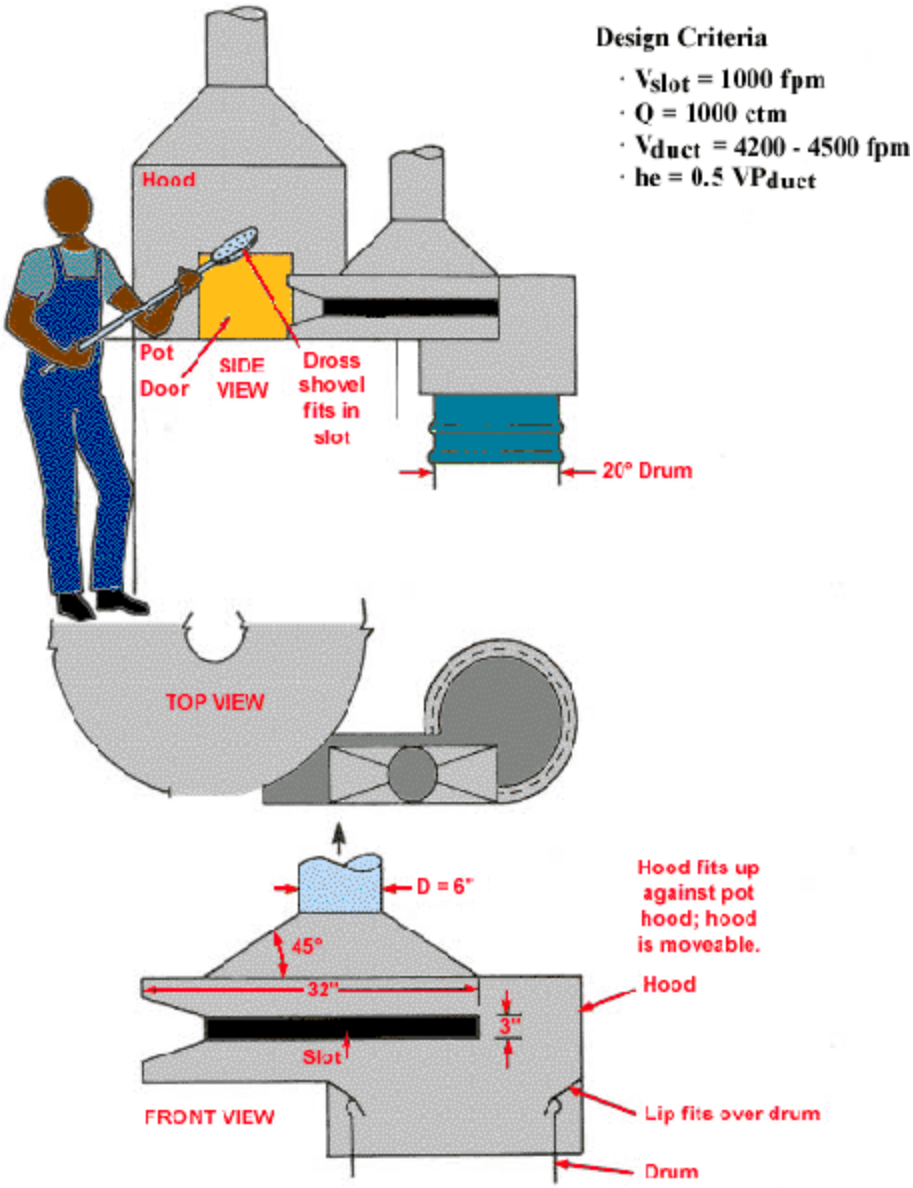

Image of scrap pot and dross hood diagram

Portable Tool Exhaust
(High Velocity/Low Volume)

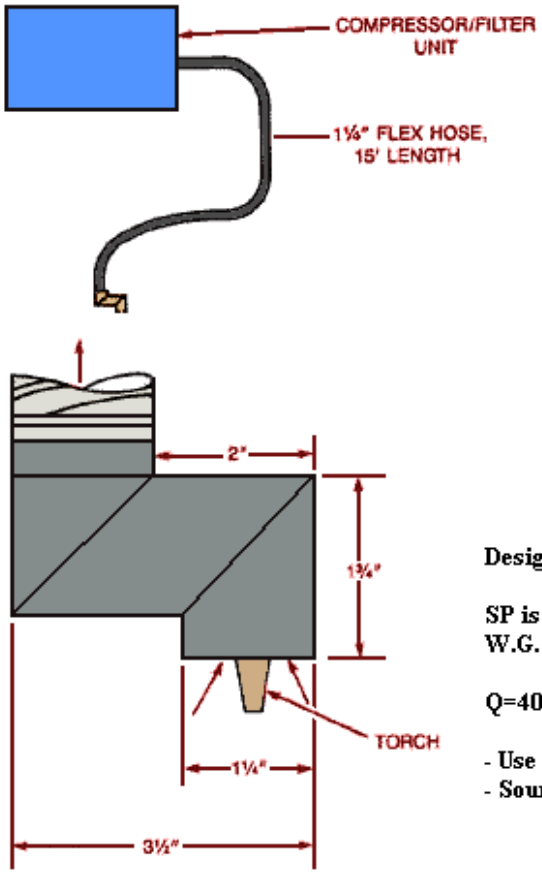

Design Criteria:

SP is greater than or equal to 72" W.G. (inlet)

Q=40 cfm

- Use steel mold
- Source must be within 1" of hood

Image of post burning, portable tool exhaust

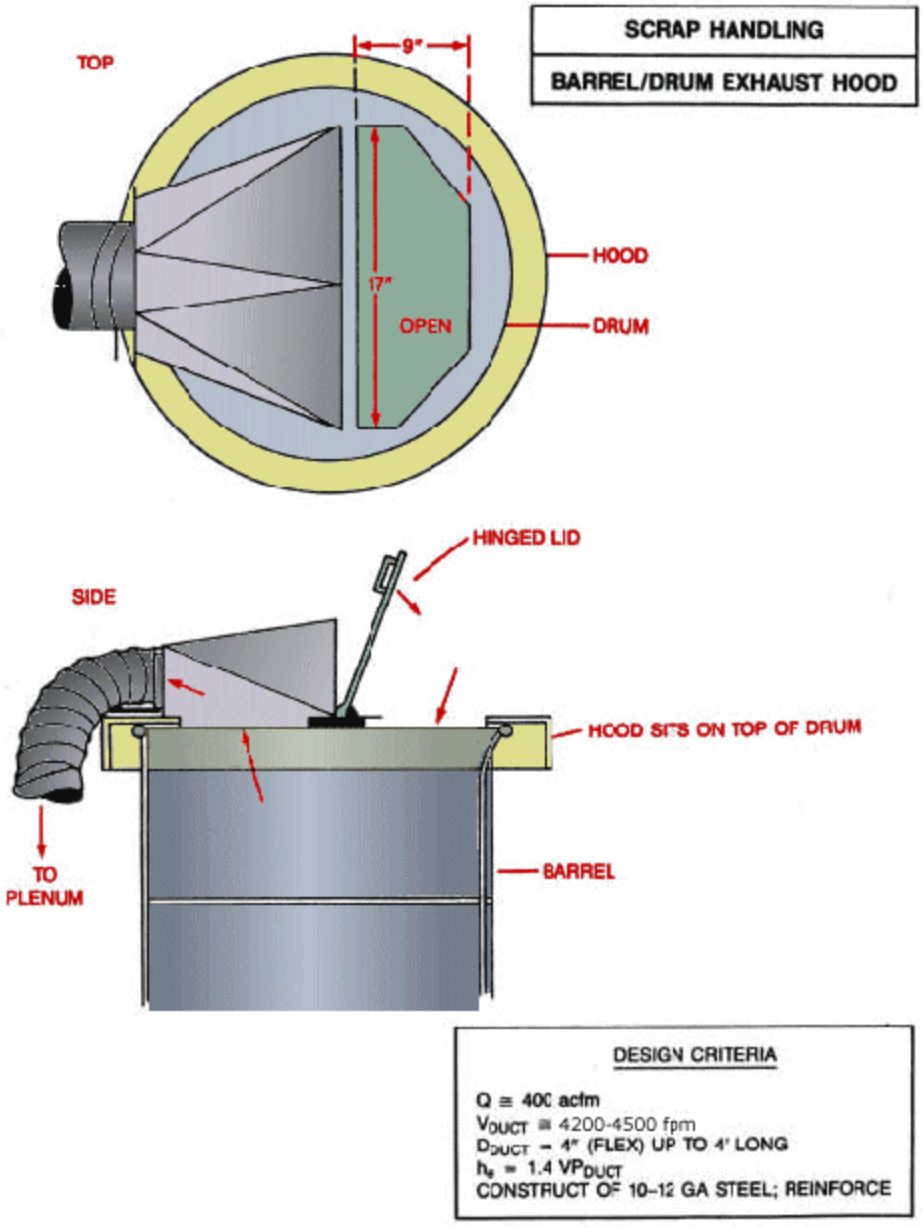

Image of scrap handling, barrel/drum exhaust hood

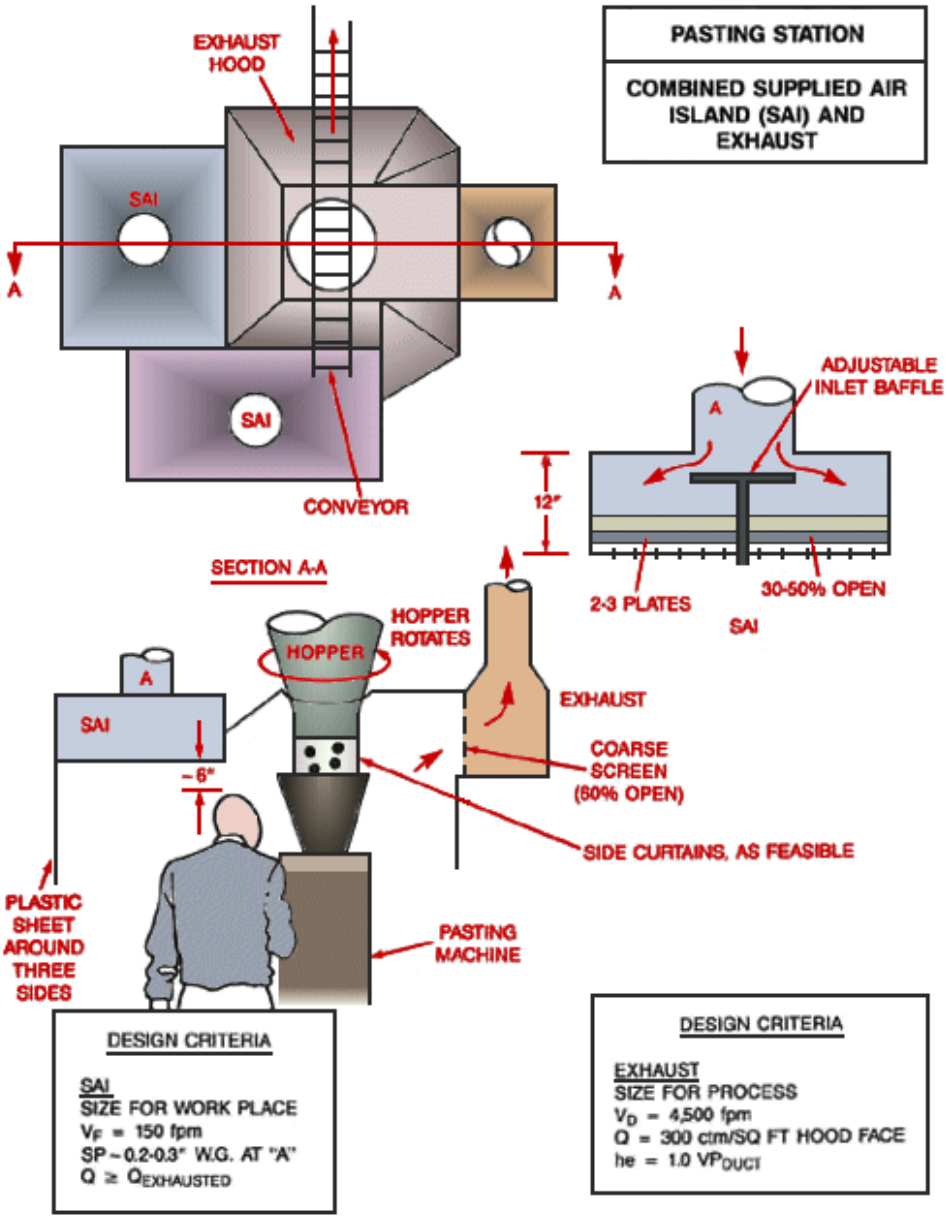

Image of pasting station, combined supplied air and exhaust diagram

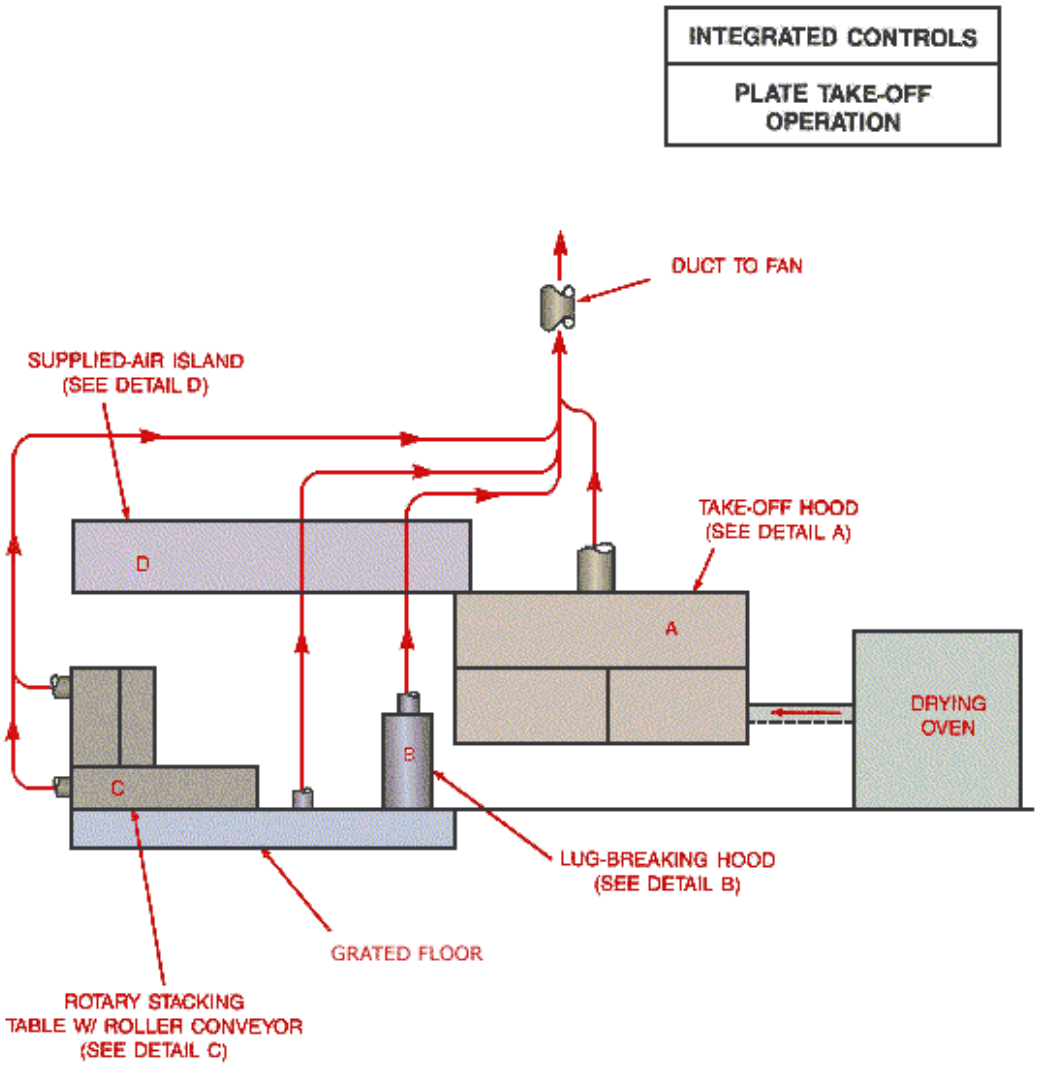

Image of integrated controls, plate take-off operation

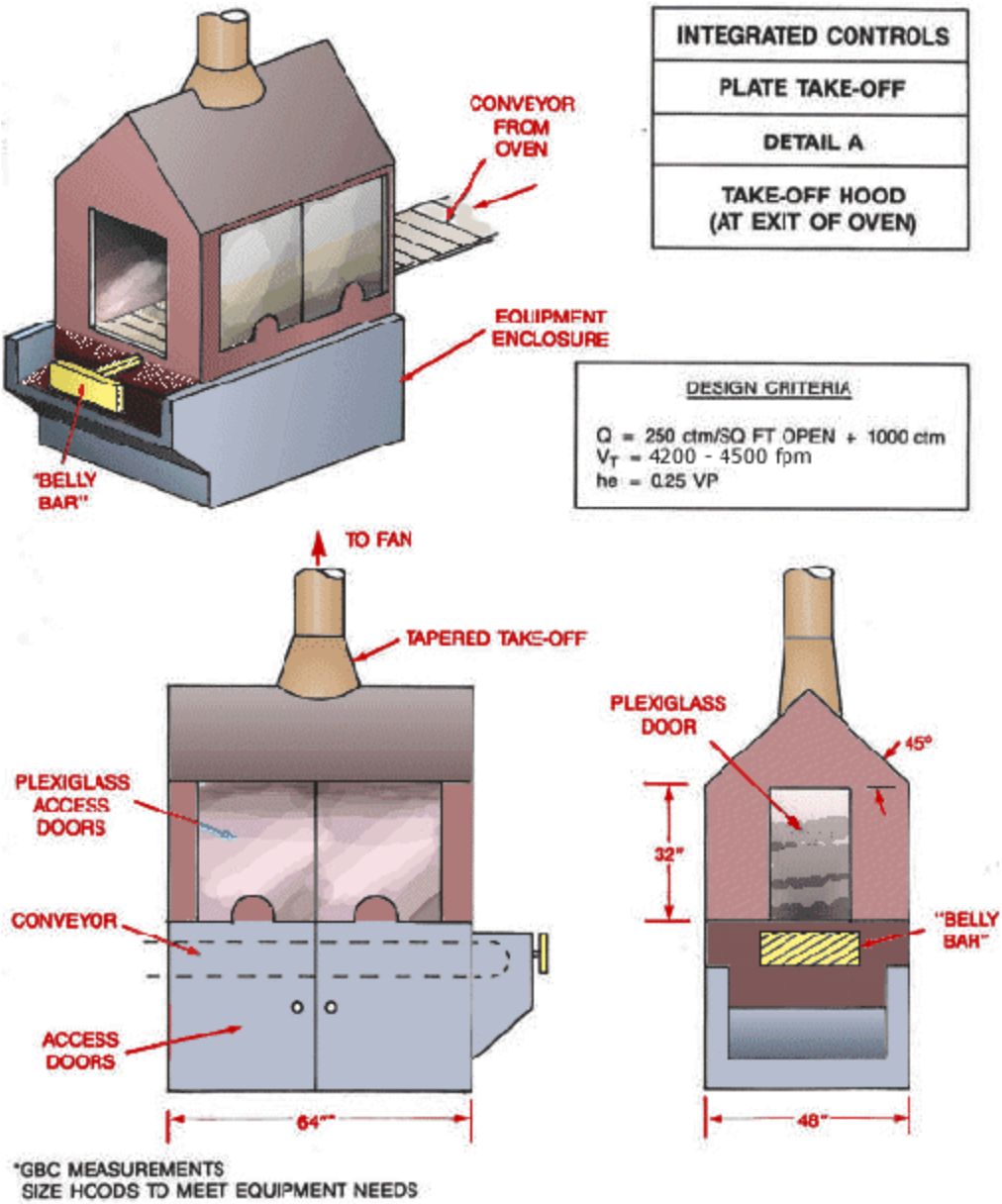

SOURCE: GBC, READING, PA

Image of integrated controls, plate take-off operation, Part A

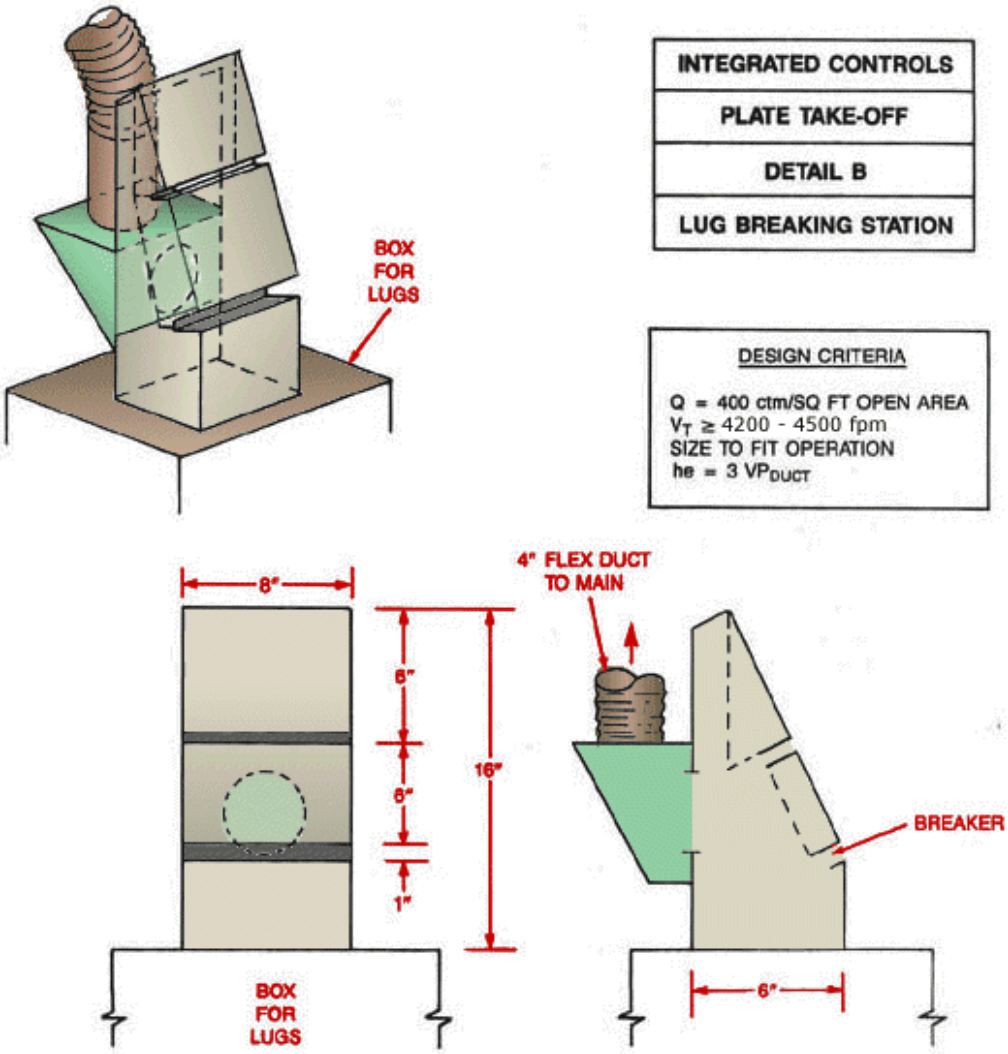

Image of integrated controls, plate take-off operation, Part B

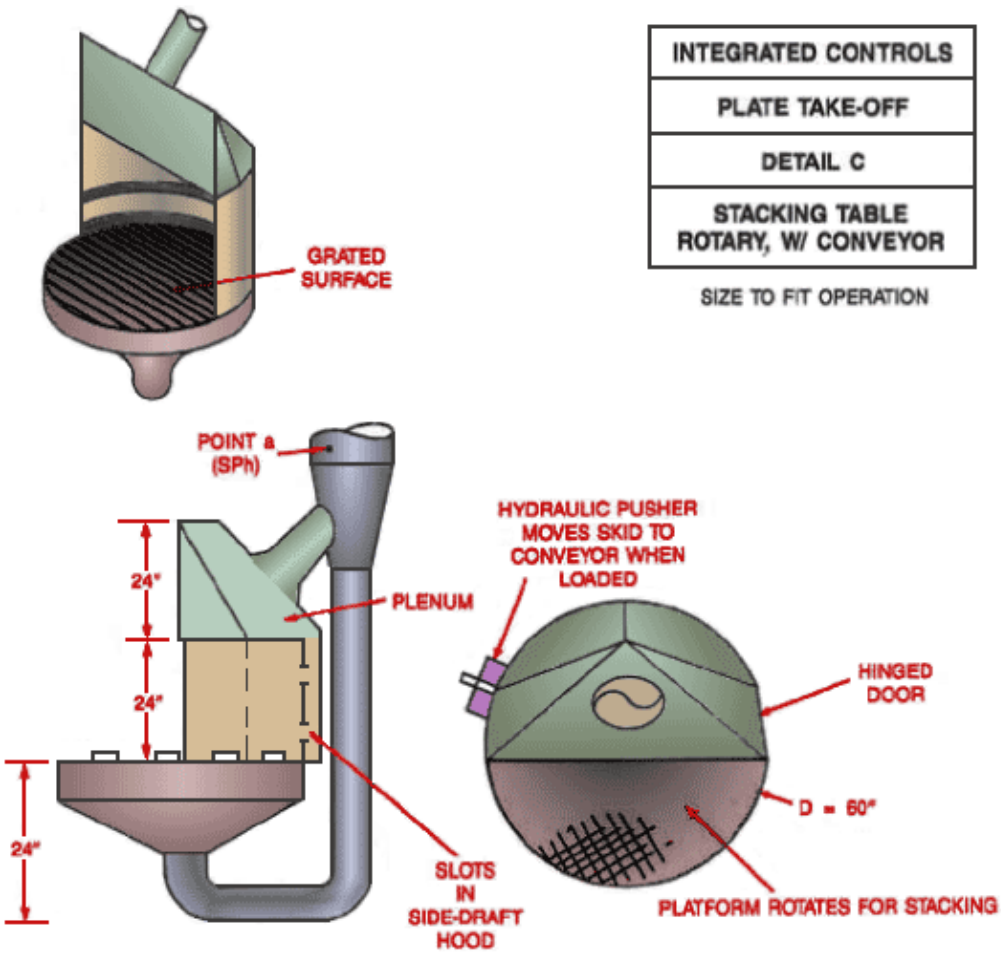

DESIGN CRITERIA

Q = 150 ctm/SQ FT DOWNDRAFT AREA + 150 ctm/SQ FT SIDE HOOD AREA
V_{SLOT} = 2000 fpm
he = NA (USE BLAST GATES TO BALANCE SYSTEM; PROVIDE AT LEAST −5" STATIC PRESSURE AT POINT a)
$V_T \geq$ 4200-4500 fpm

Image of integrated controls, plate take-off operation, Part C

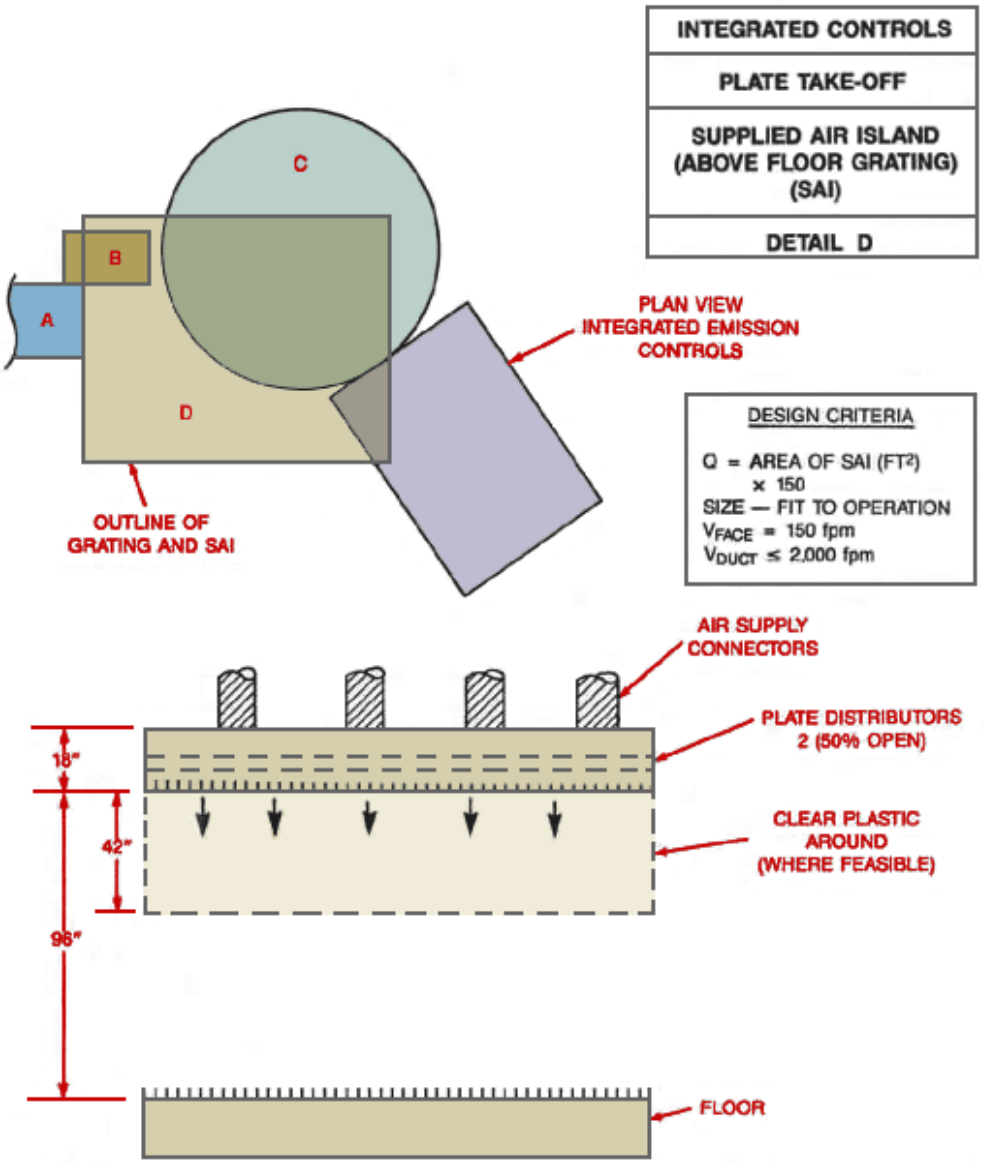

Image of integrated controls, plate take-off operation, Part D

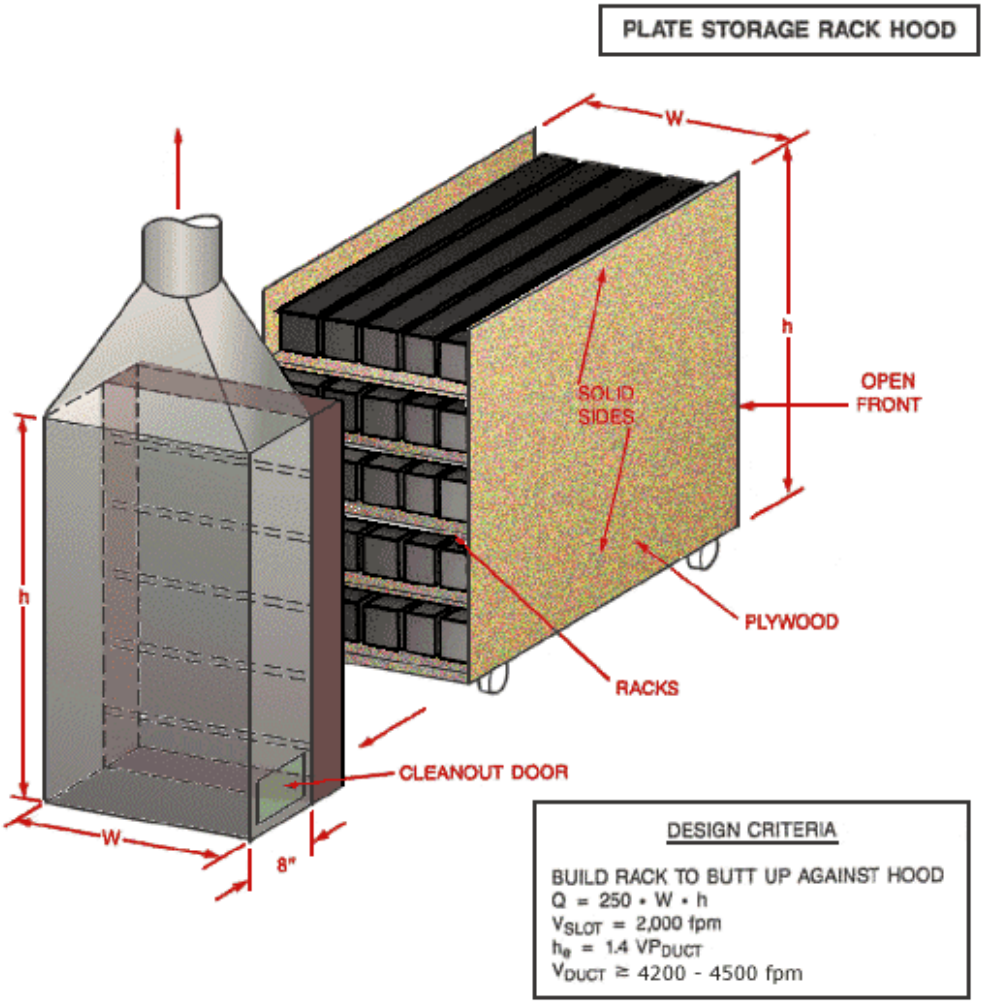

Image of plate storage rack hood

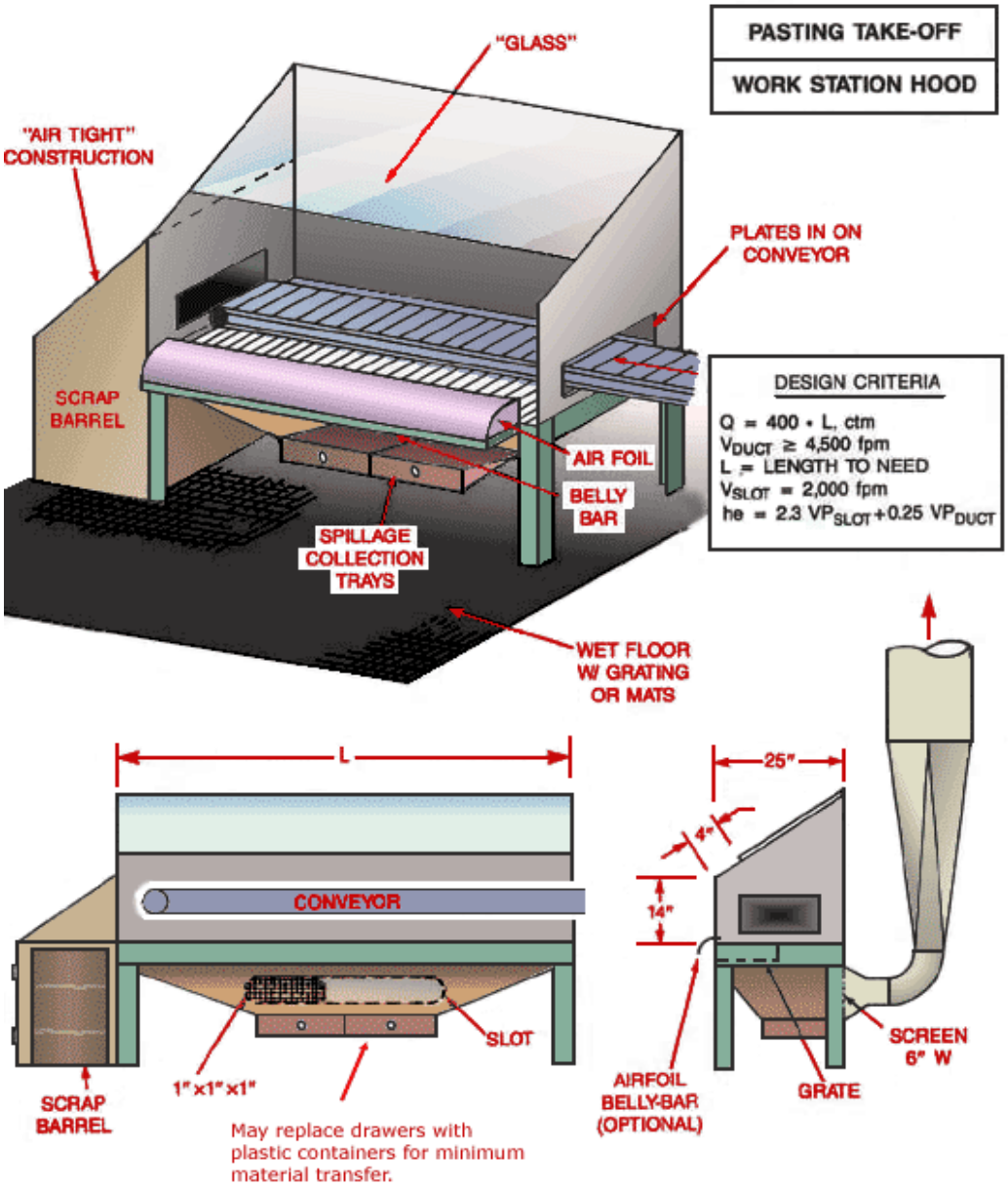

Image of pasting take-off, work station hood

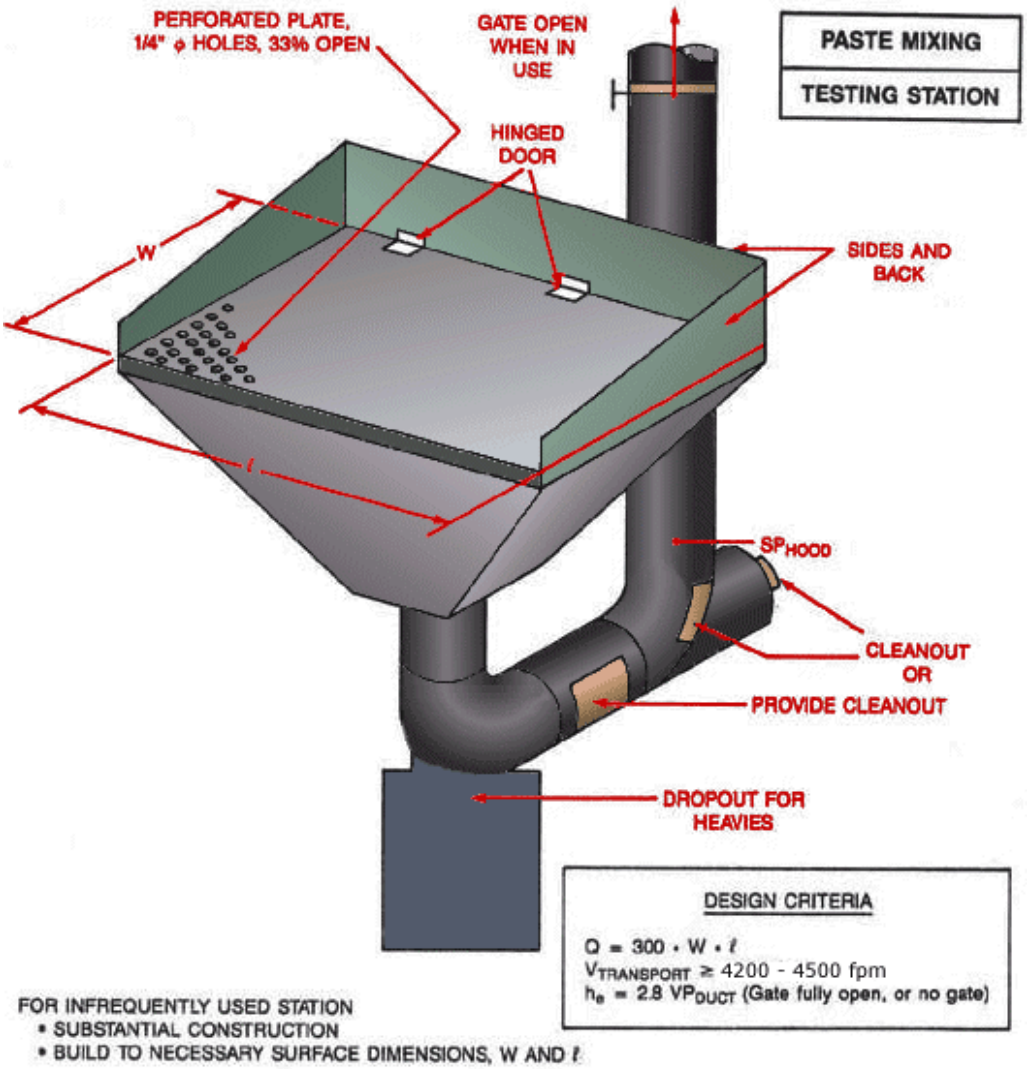

Image of paste mixing, testing station diagram

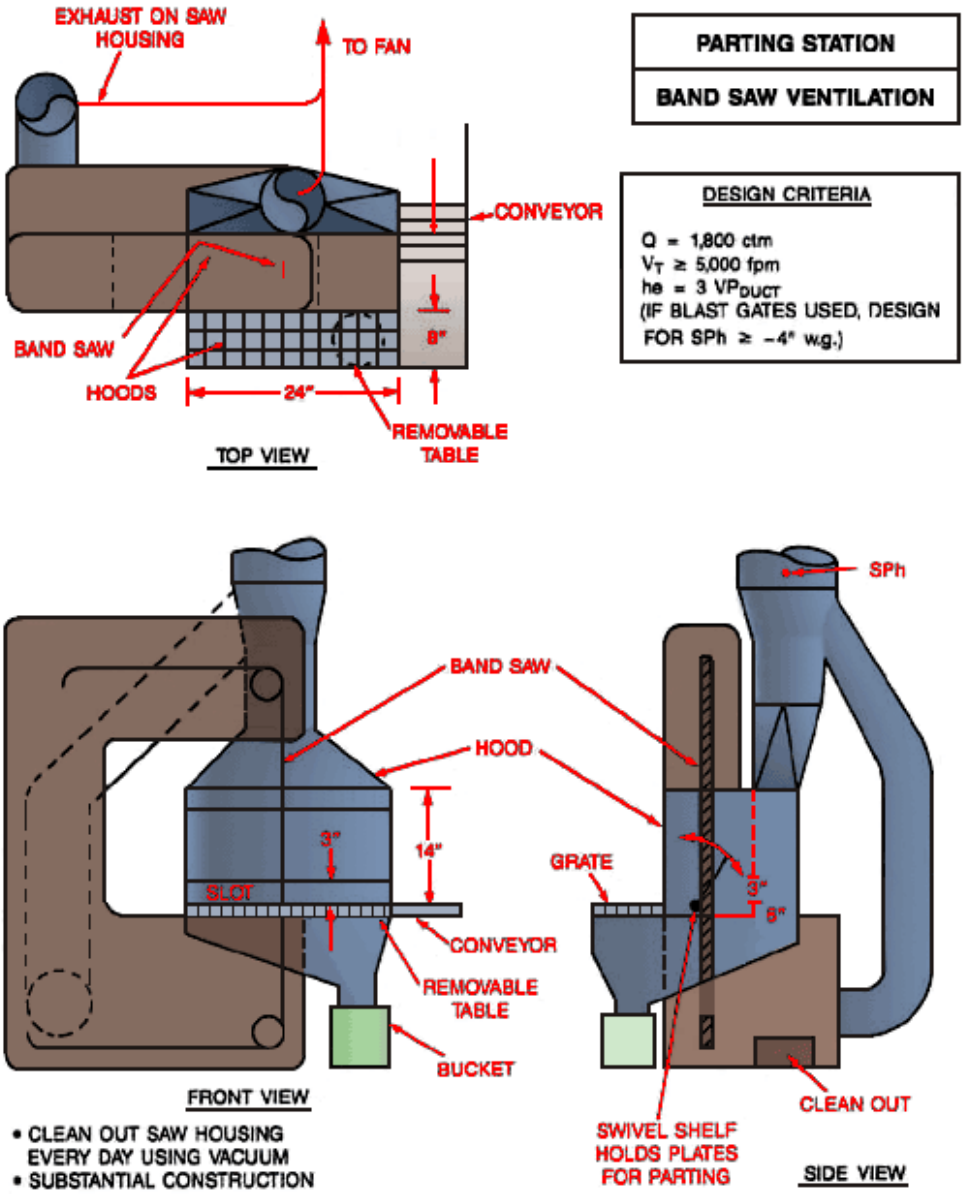

Image of parting station, band saw ventilation

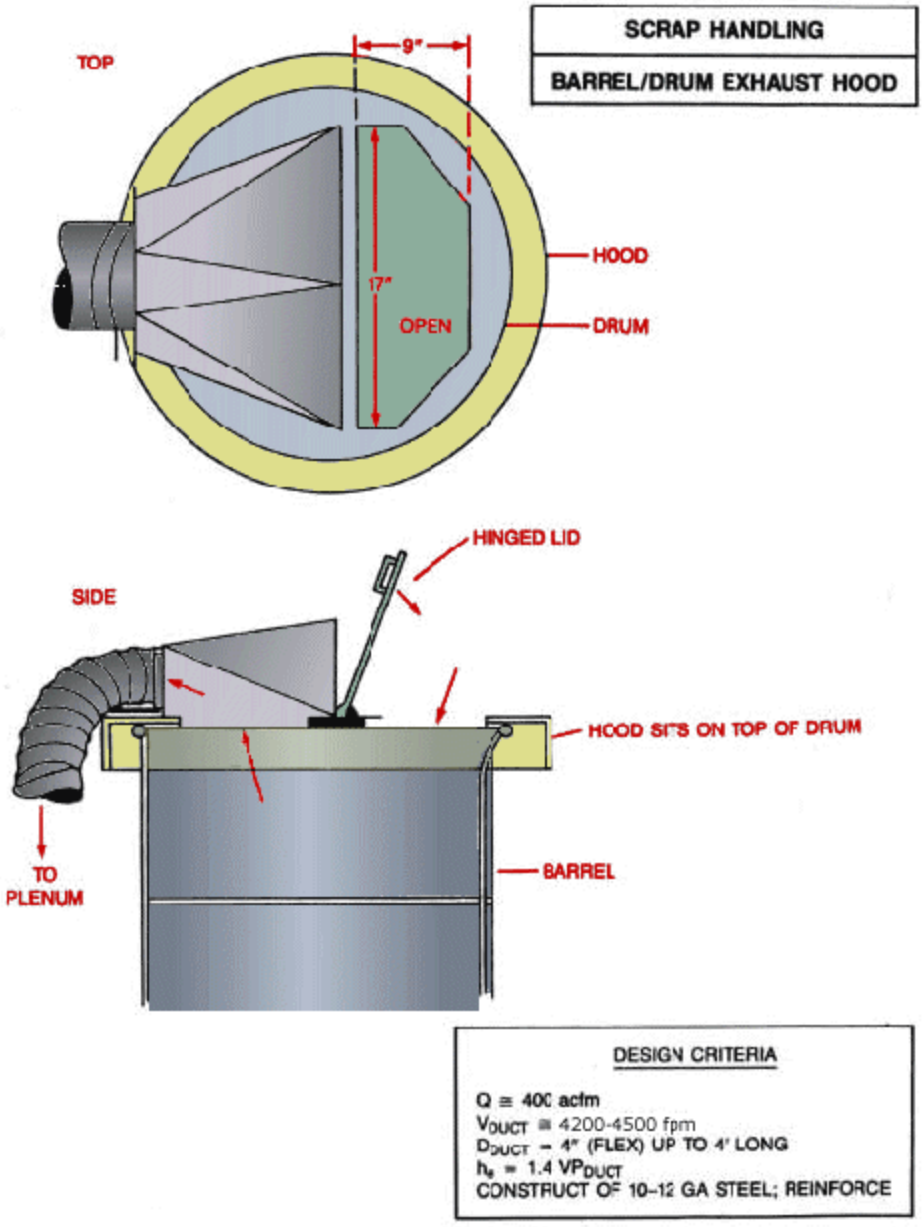

Image of scrap handling, barrel/drum exhaust hood

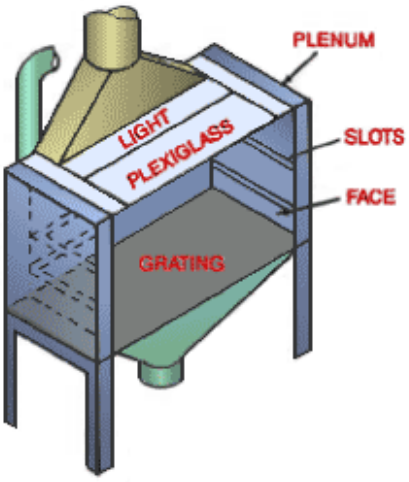

PLATE WRAPPING STATION (INDUSTRIAL)

DESIGN CRITERIA

Q = H x L x 300 (HOOD) + W x L x 200 (GRATE)
(TYPICAL — 4000 ctm)
$V_T \geq$ 4200-4500 fpm
h_B = NA (USE BLAST GATES FOR BALANCING)
SPh (DESIGN) $\geq$ −4" W.G.
V_{SLOT} = 2000 fpm

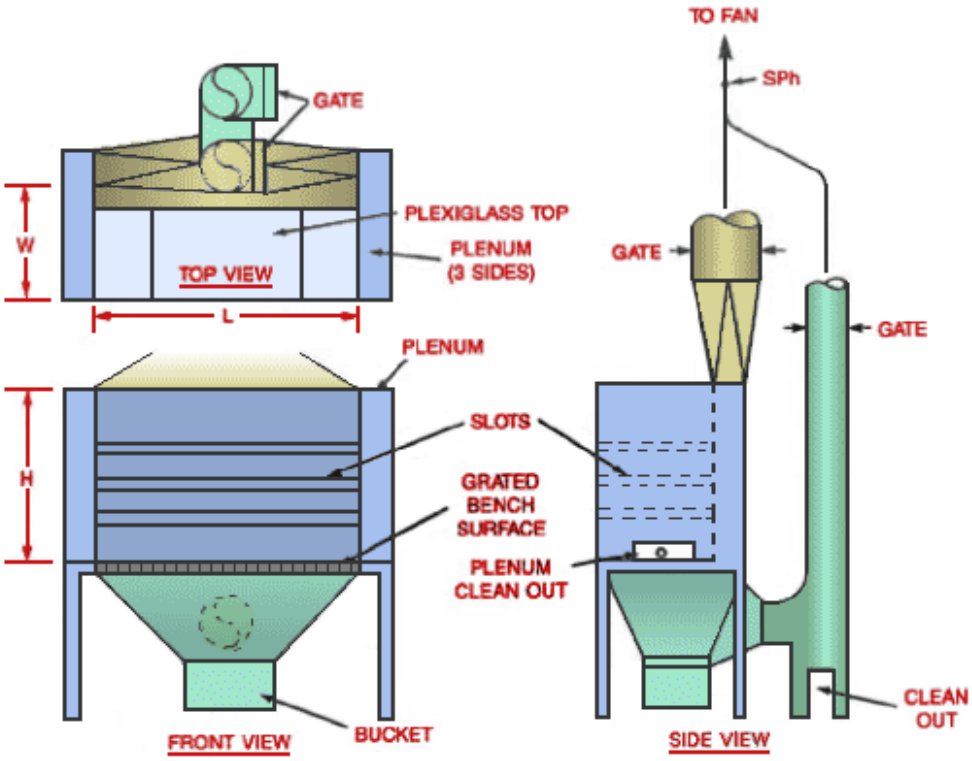

Image of plate wrapping station diagram

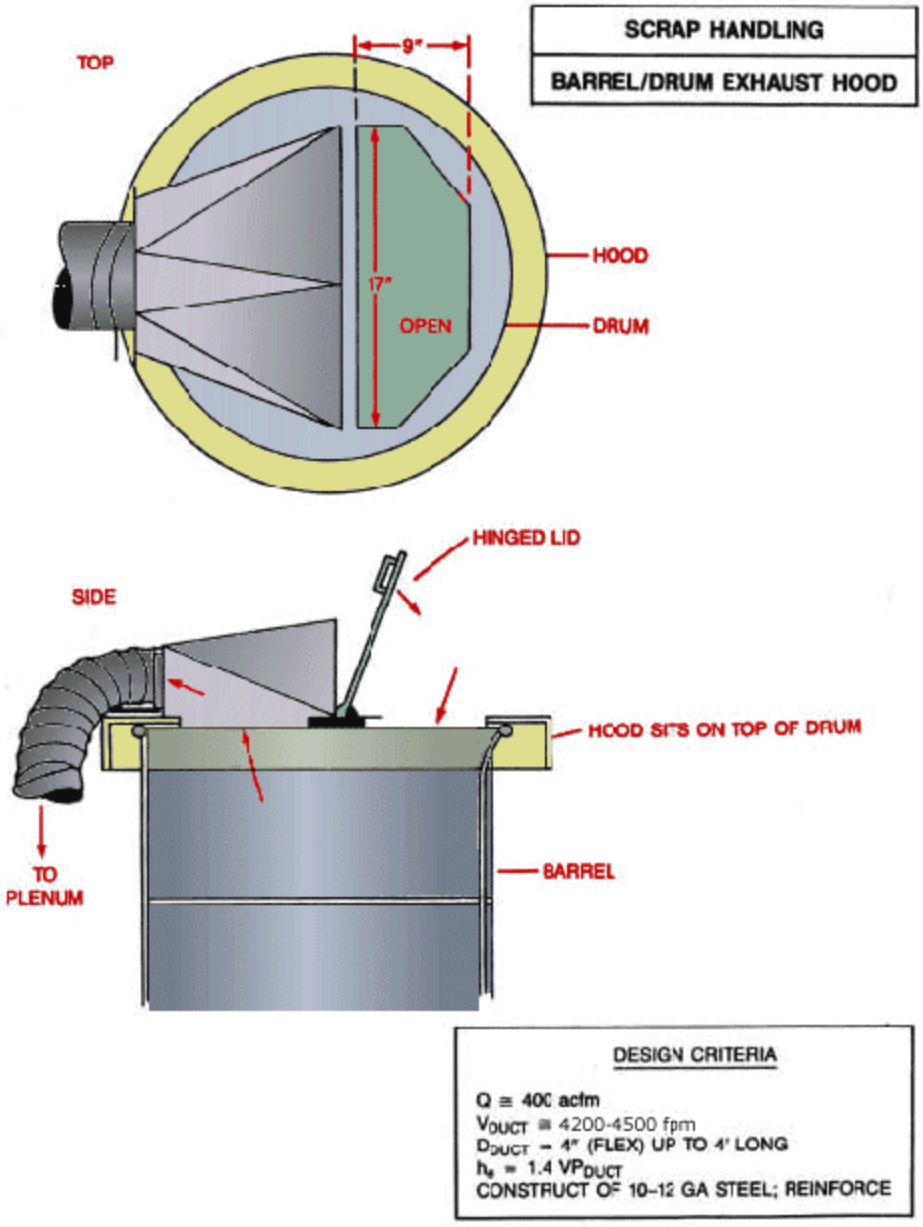

Image of scrap handling, barrel/drum exhaust hood

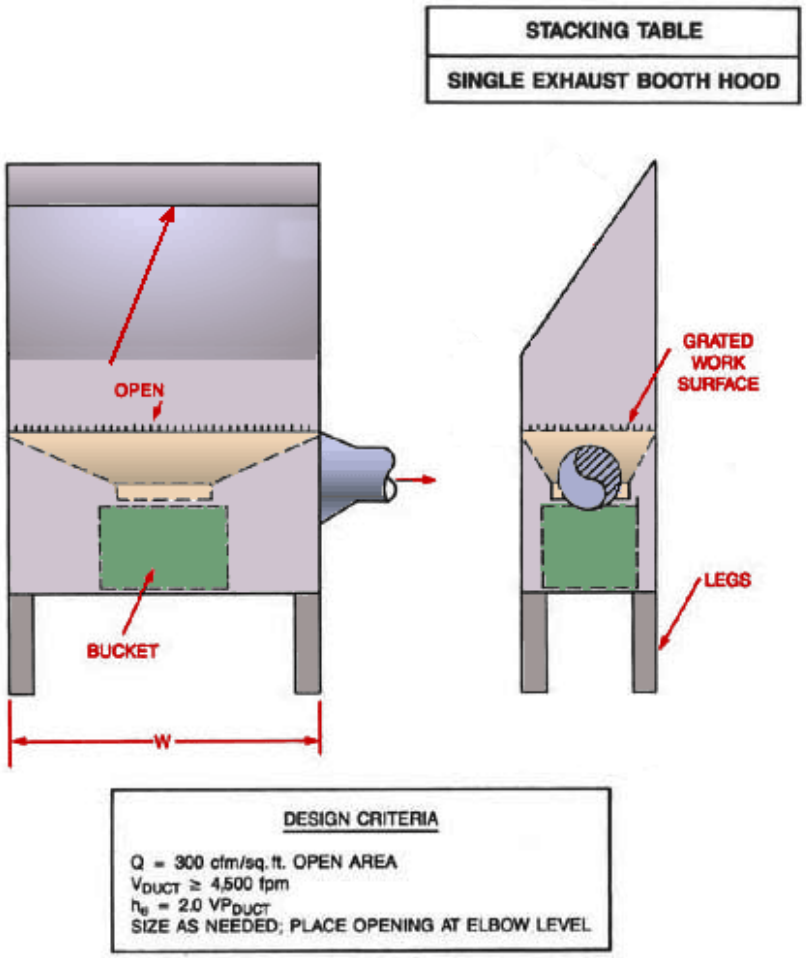

Image of stacking table, single exhaust booth hood

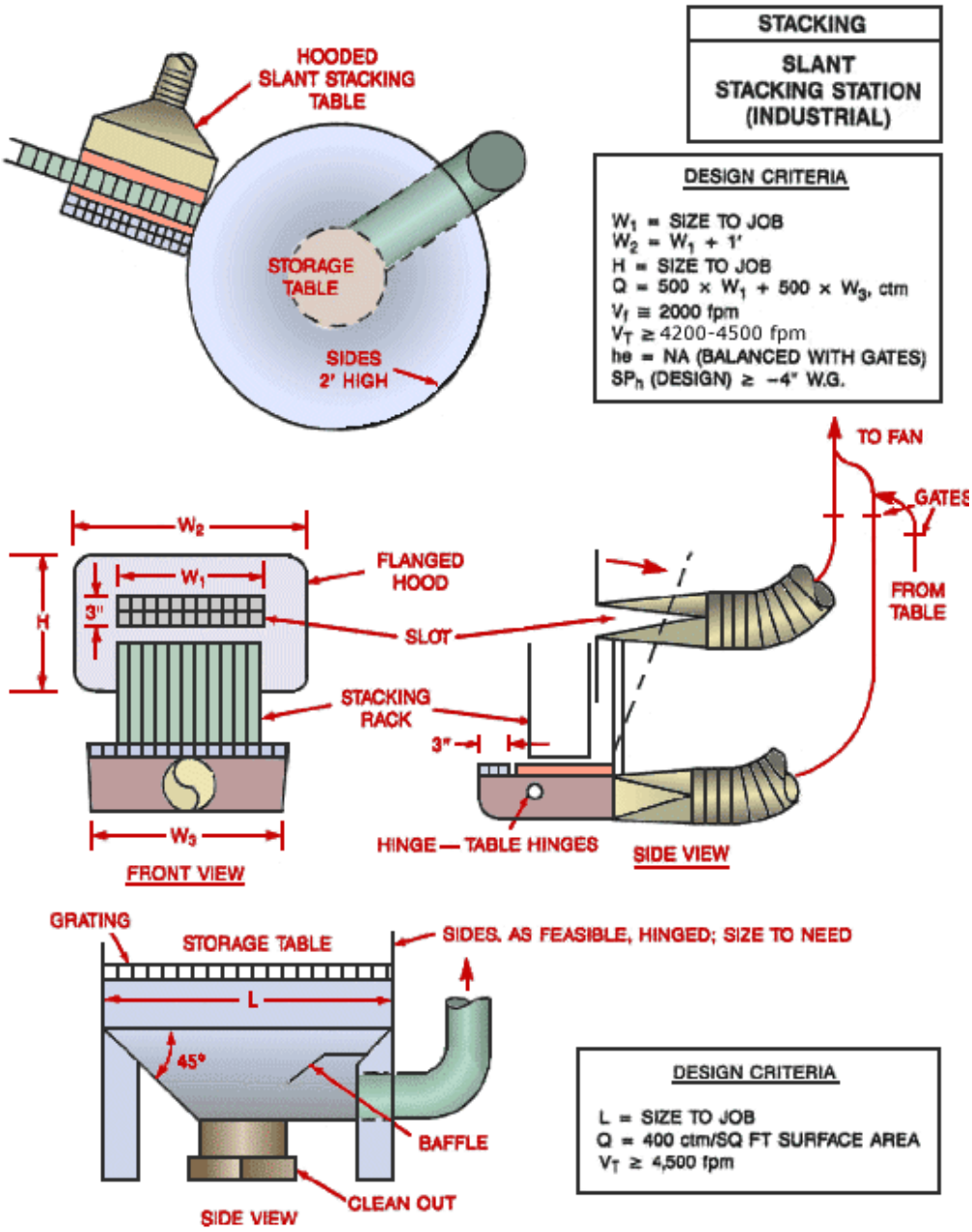

Image of slant stacking station (industrial)

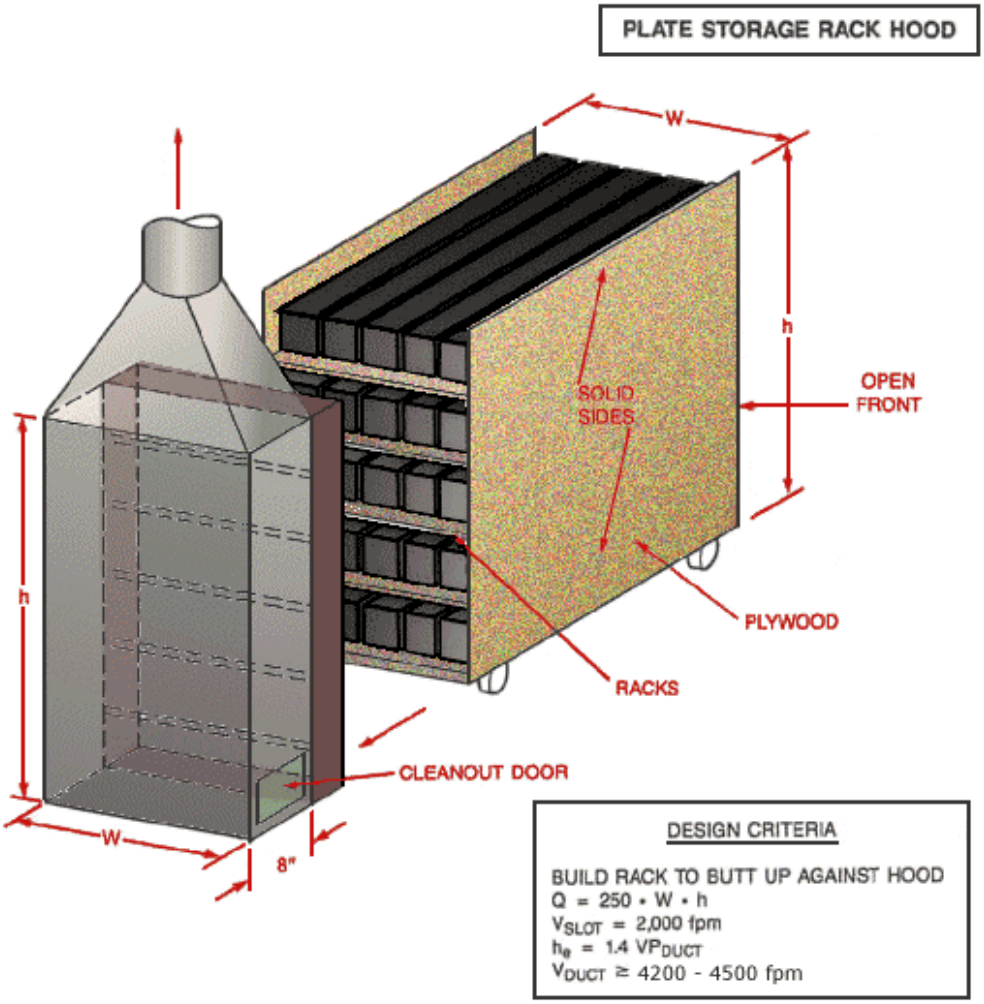

Image of plate storage rack hood

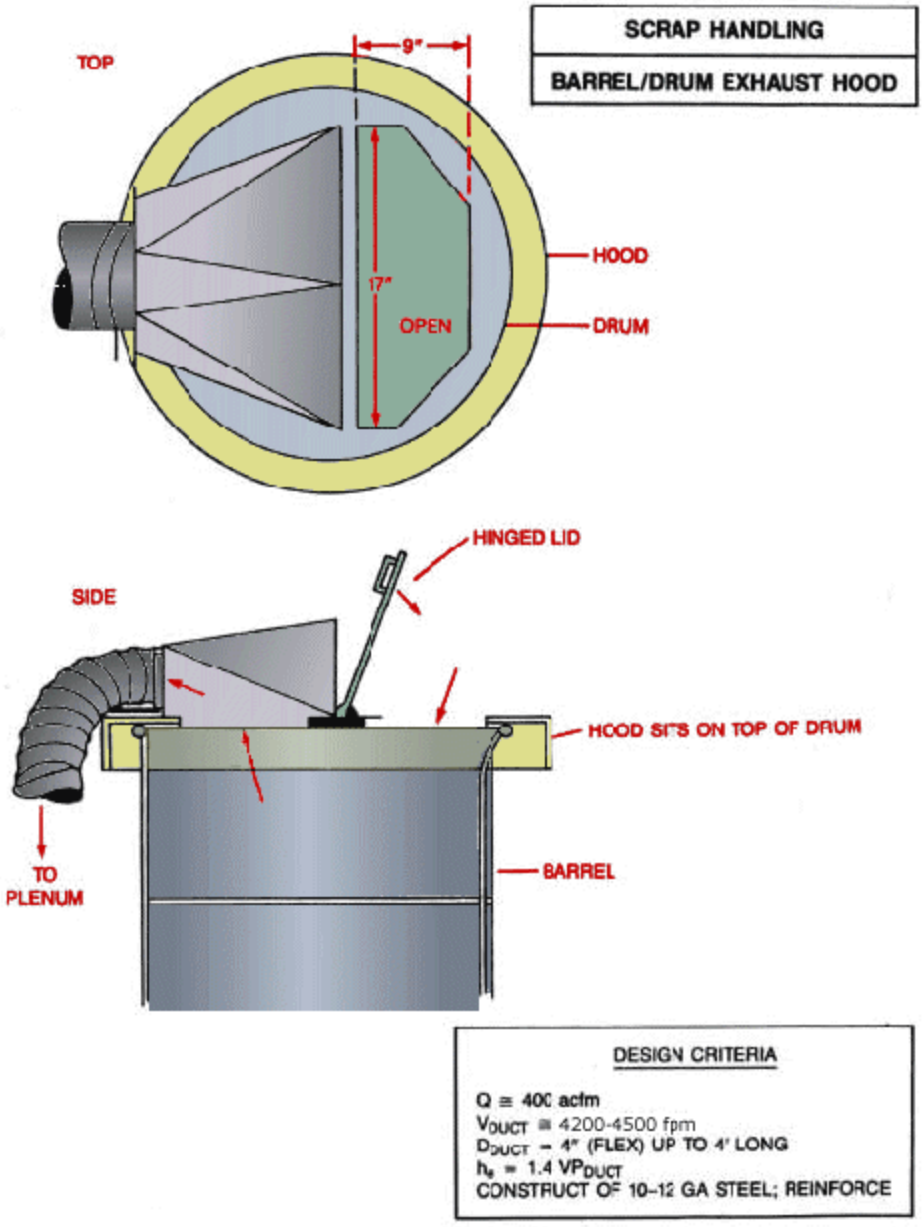

Image of scrap handling, barrel/drum exhaust hood

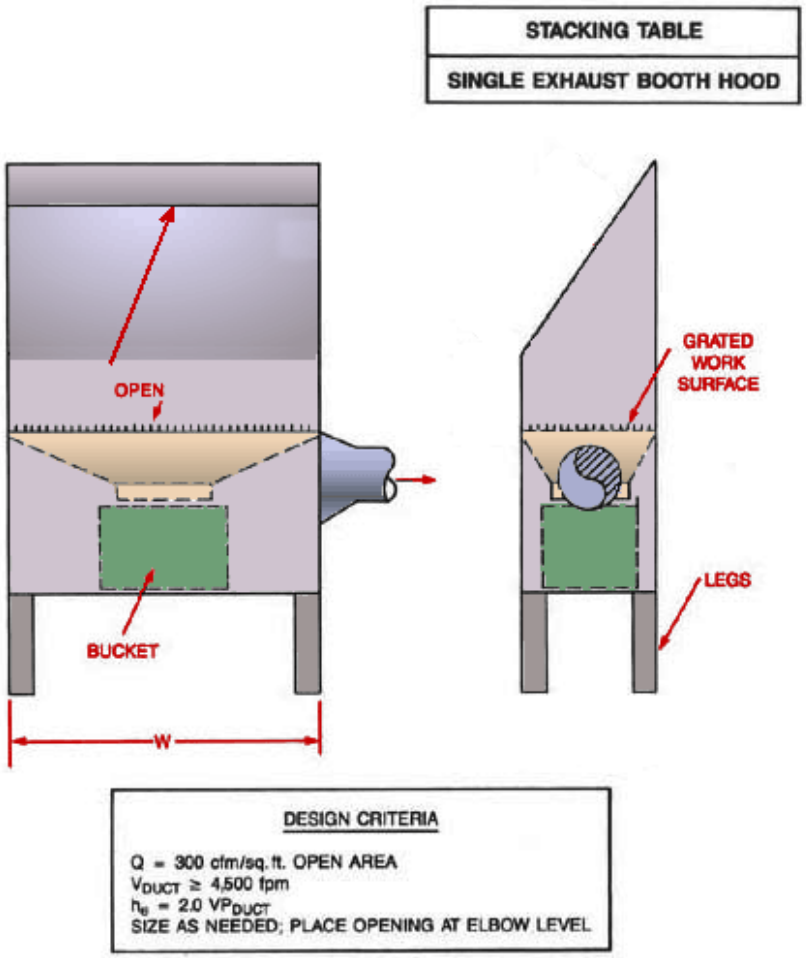

Image of stacking table, single exhaust booth hood

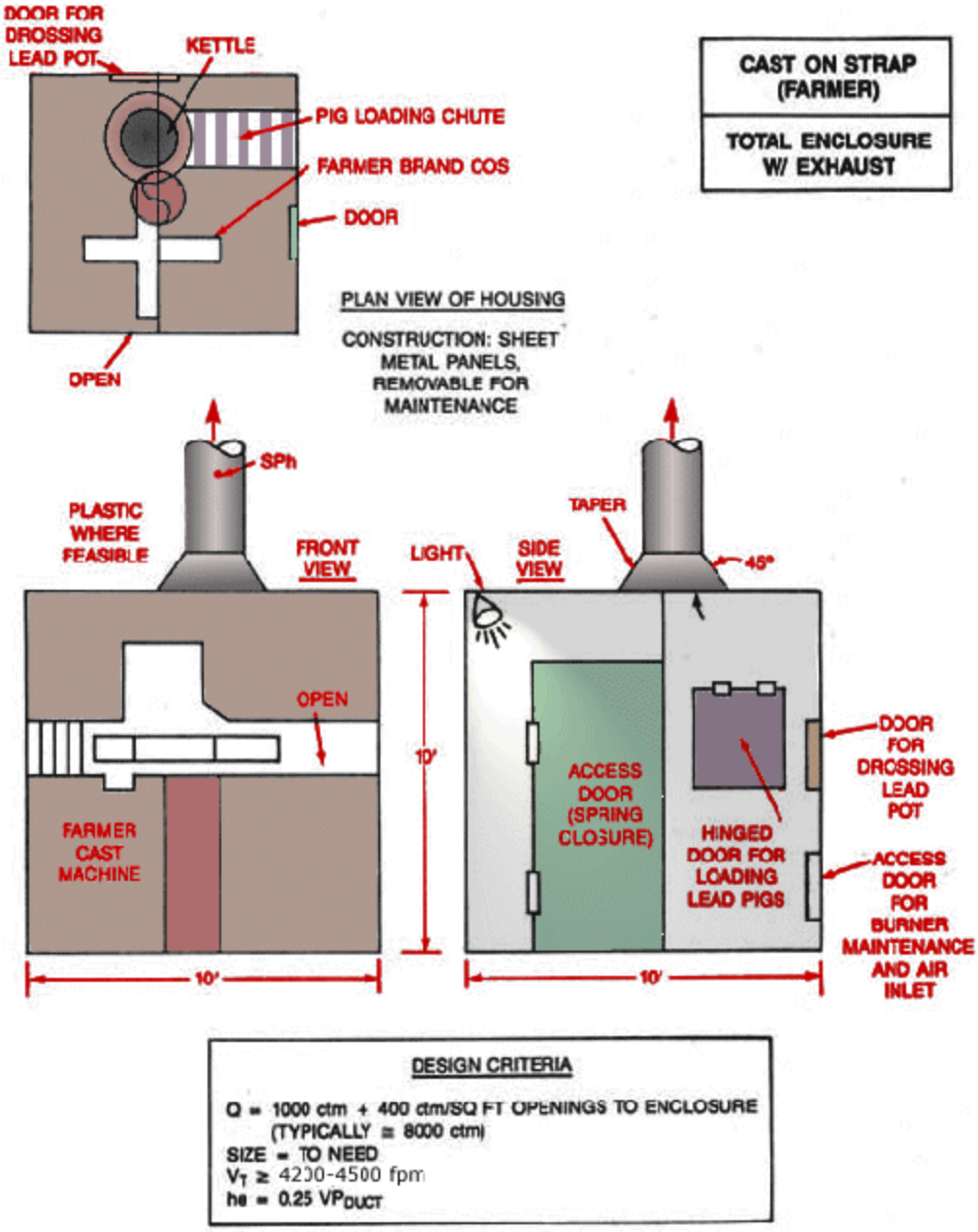

DESIGN CRITERIA

Q = 1000 ctm + 400 ctm/SQ FT OPENINGS TO ENCLOSURE (TYPICALLY ≅ 8000 ctm)
SIZE = TO NEED
$V_T \geq$ 4230-4500 fpm
he = 0.25 VP_{DUCT}

Image of farmer cast on strap machine

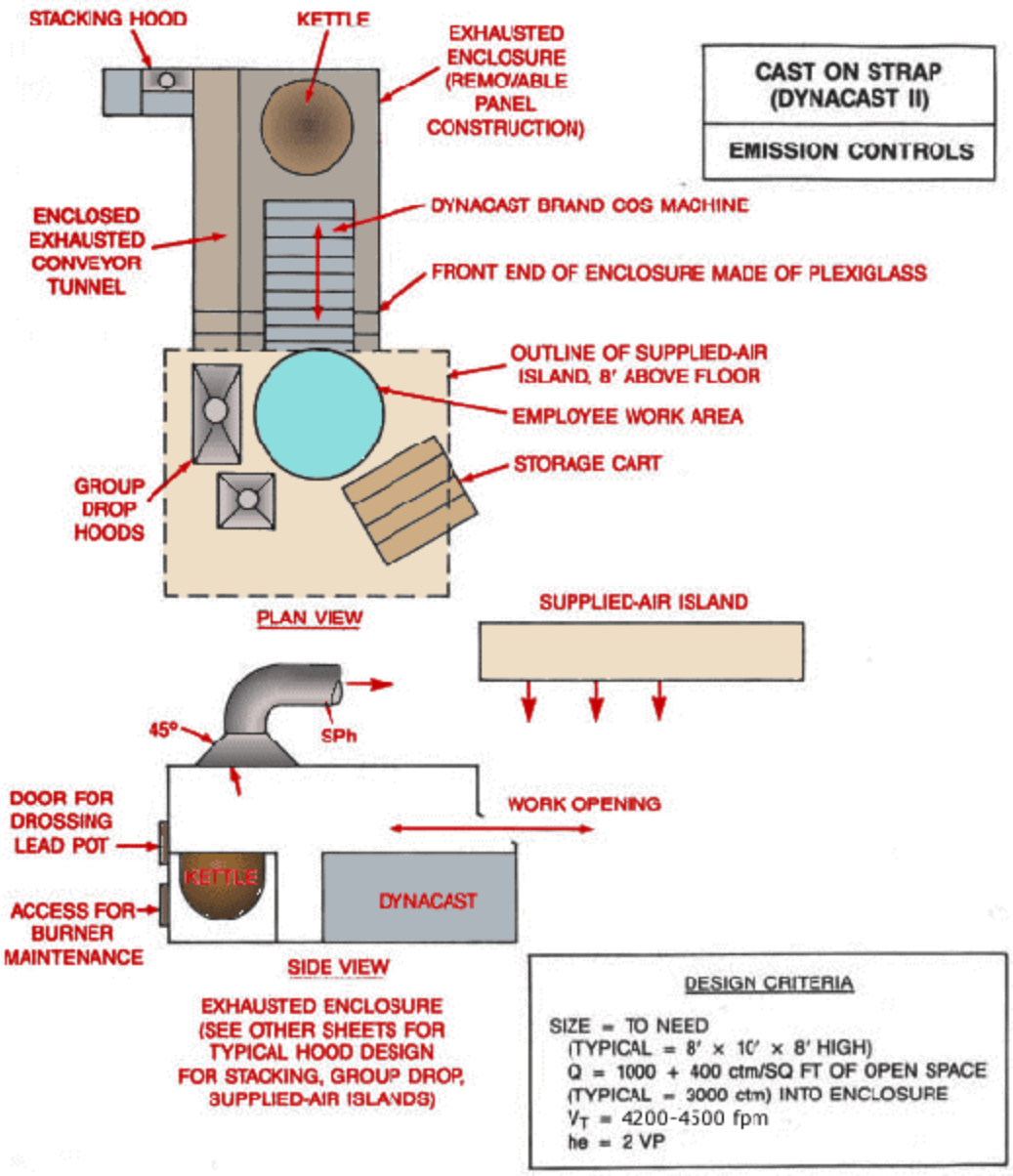

Image of dynacast cast on strap machine

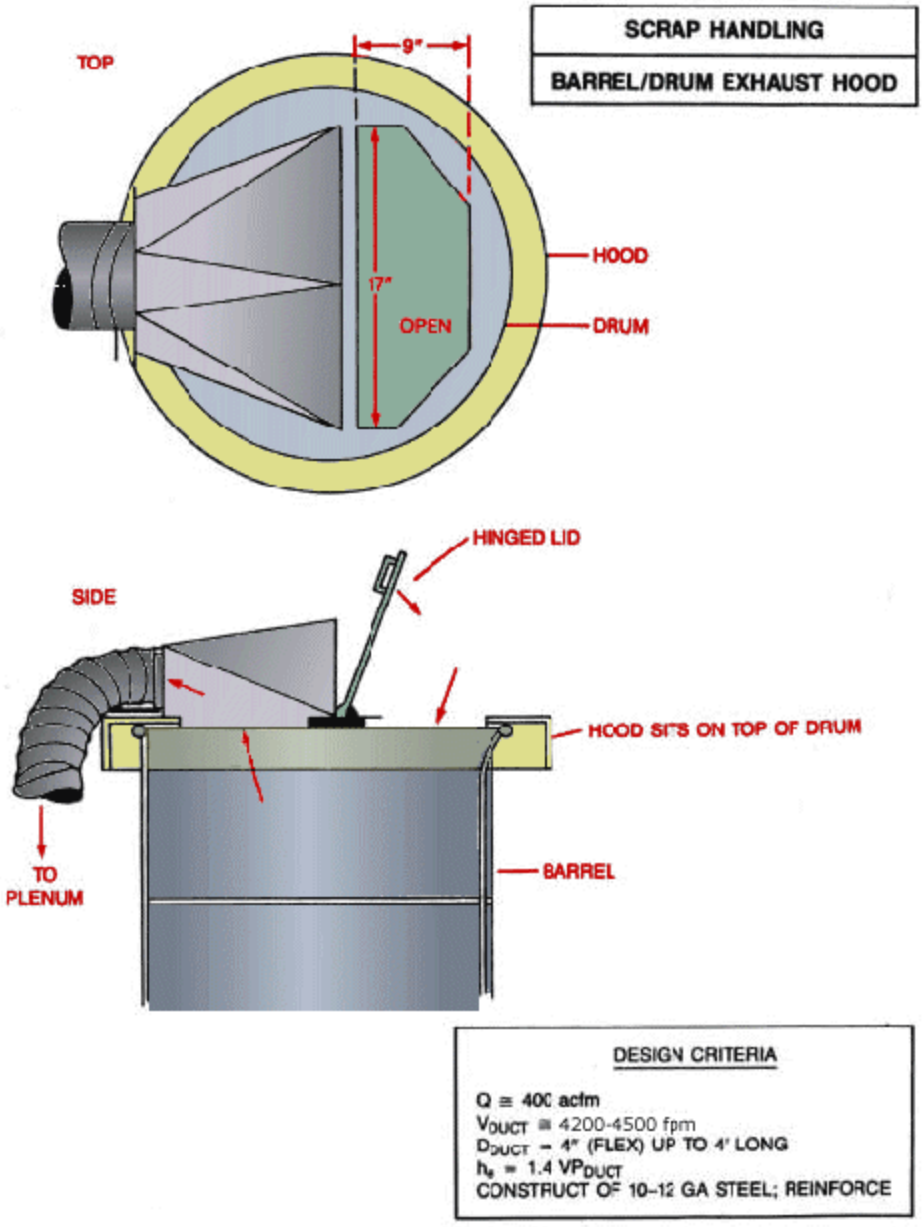

Image of scrap handling, barrel/drum exhaust hood

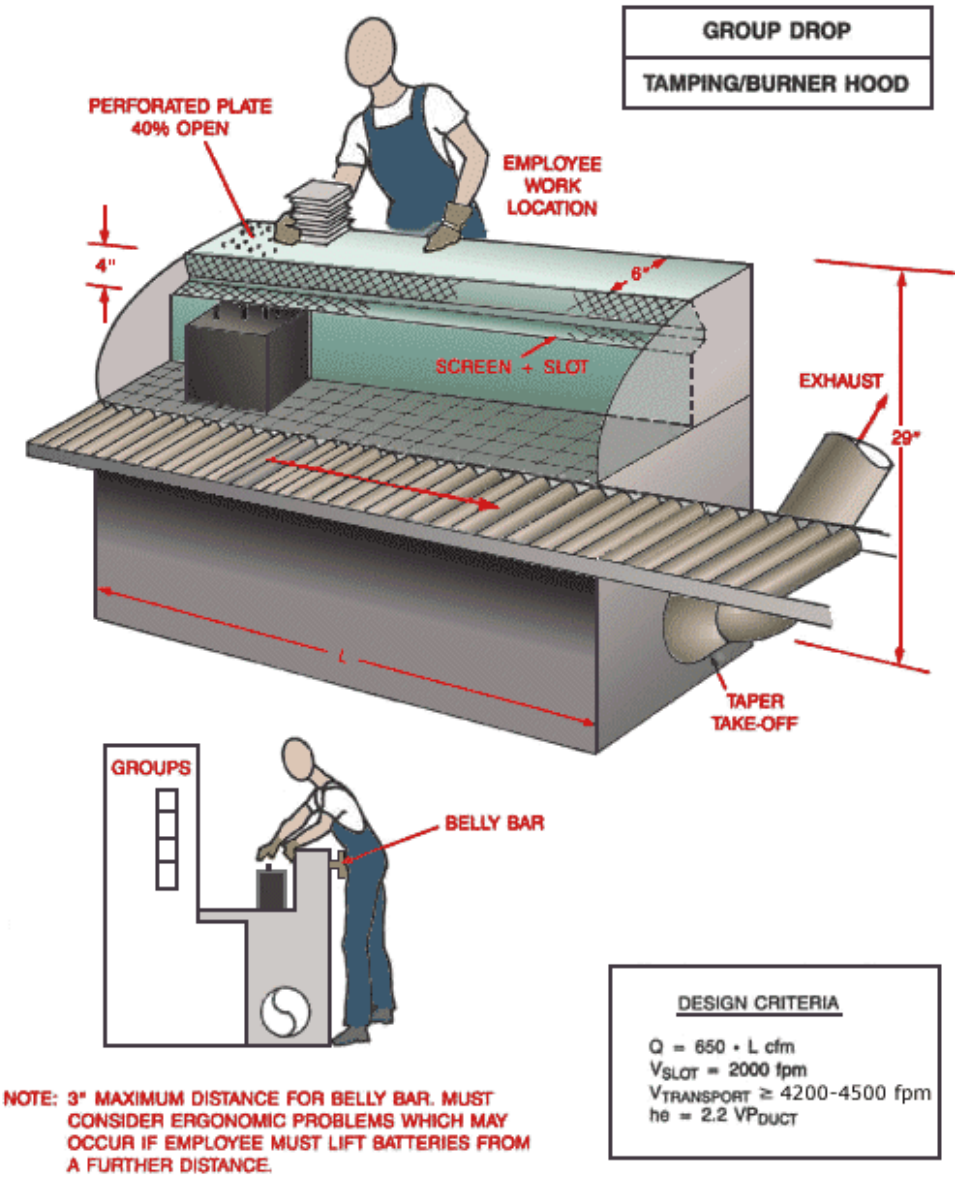

Image of tamping/burner hood

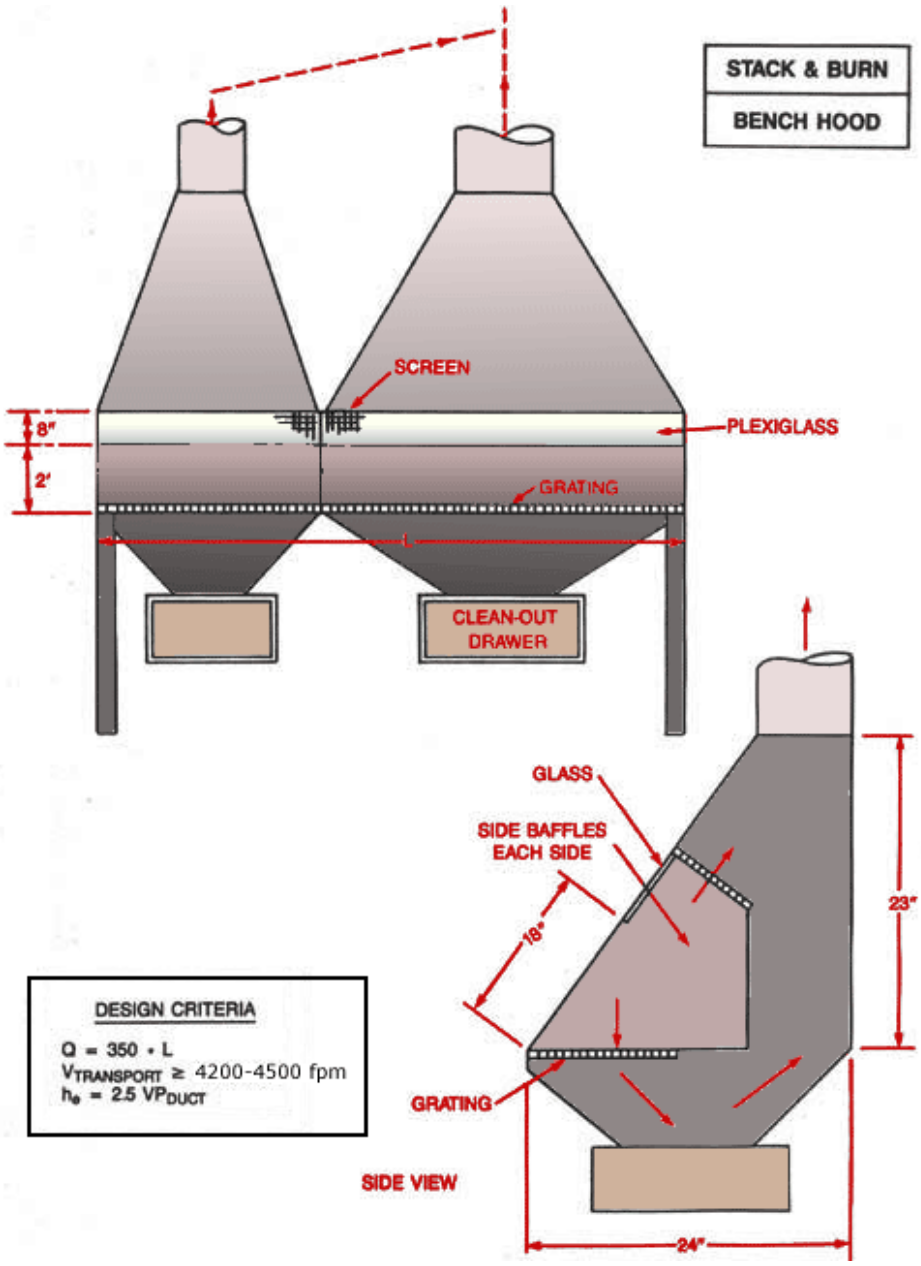

Image of bench hood

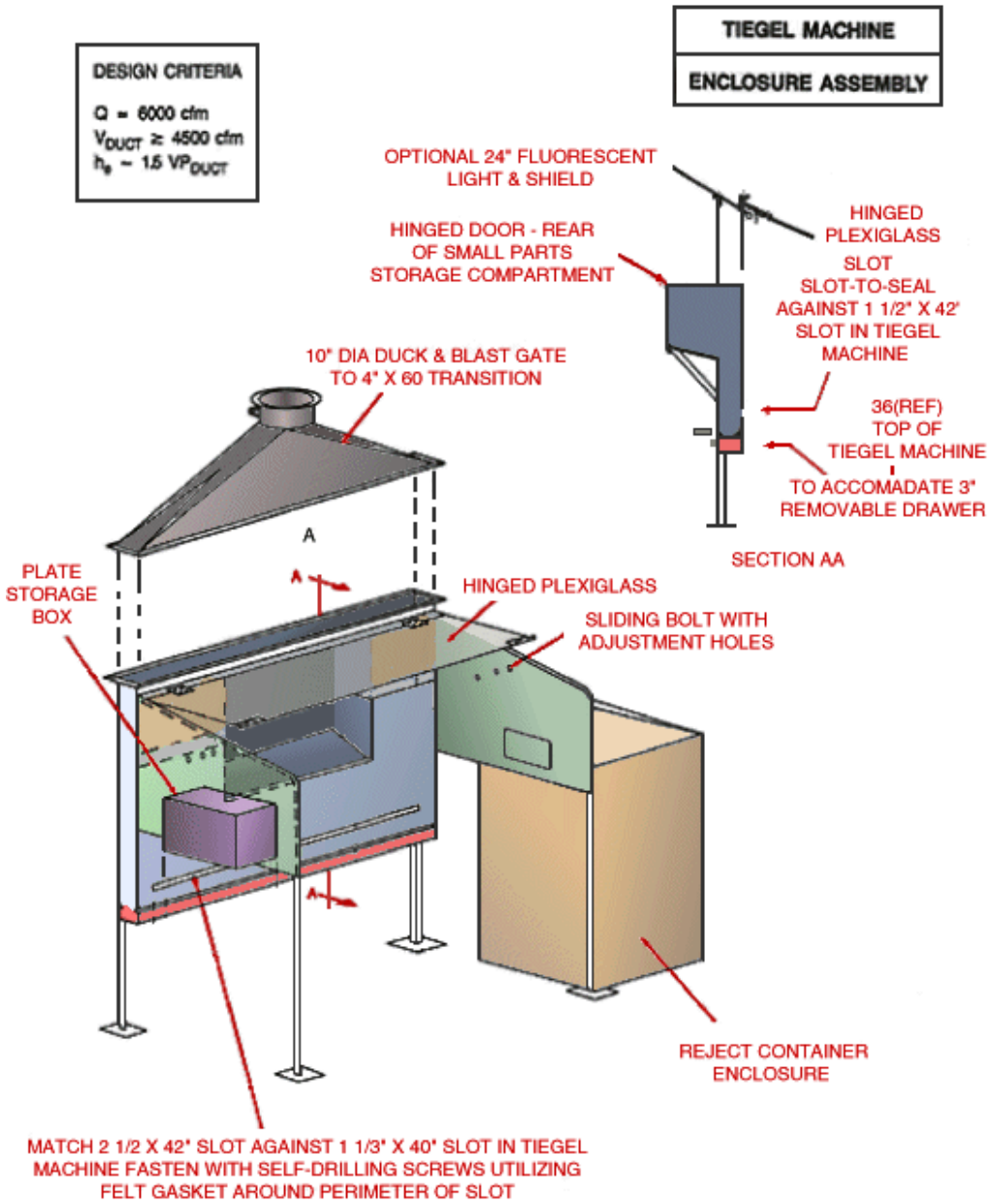

Image of tiegal machine

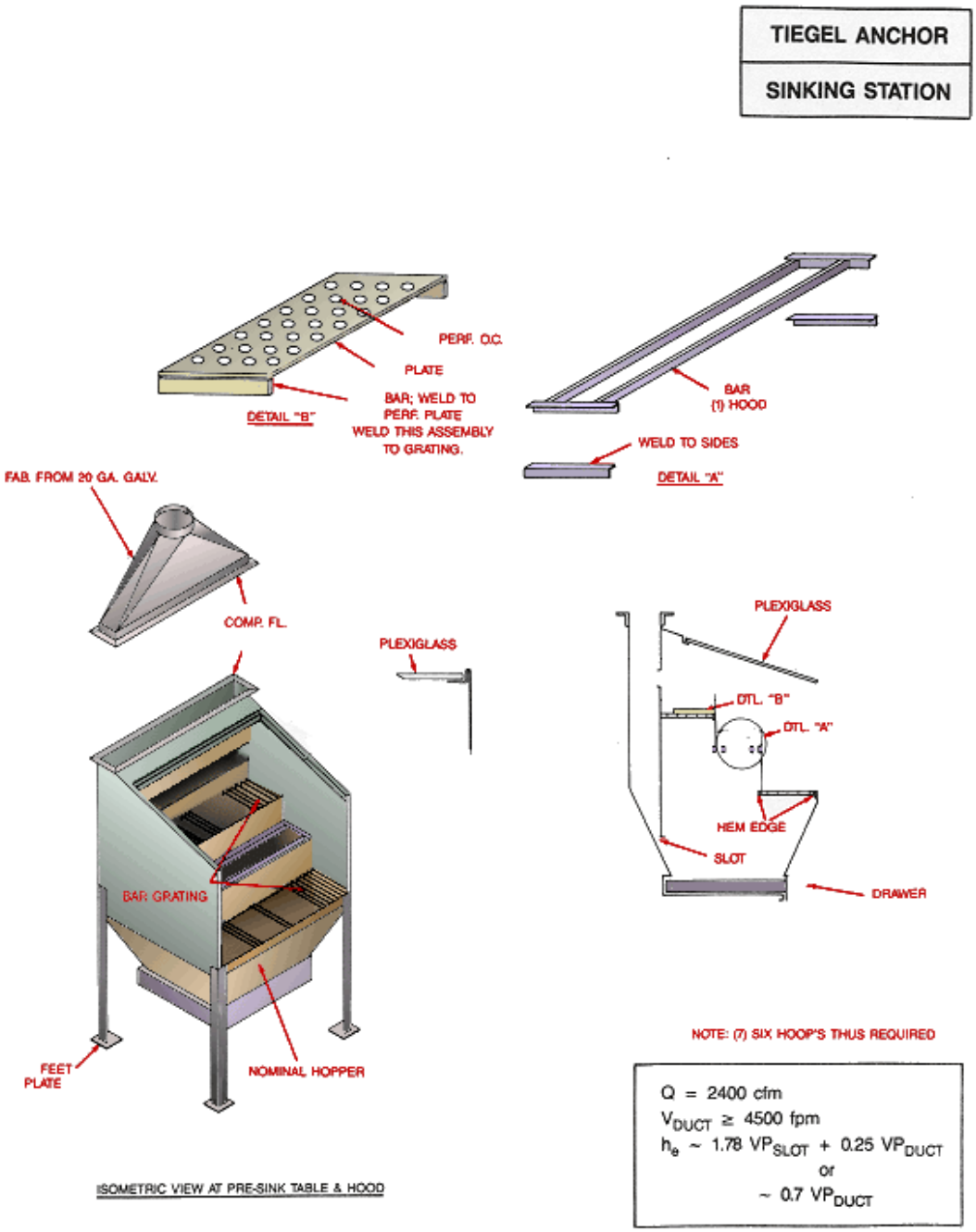

Image of tiegal anchor

Portable Tool Exhaust
(High Velocity/Low Volume)

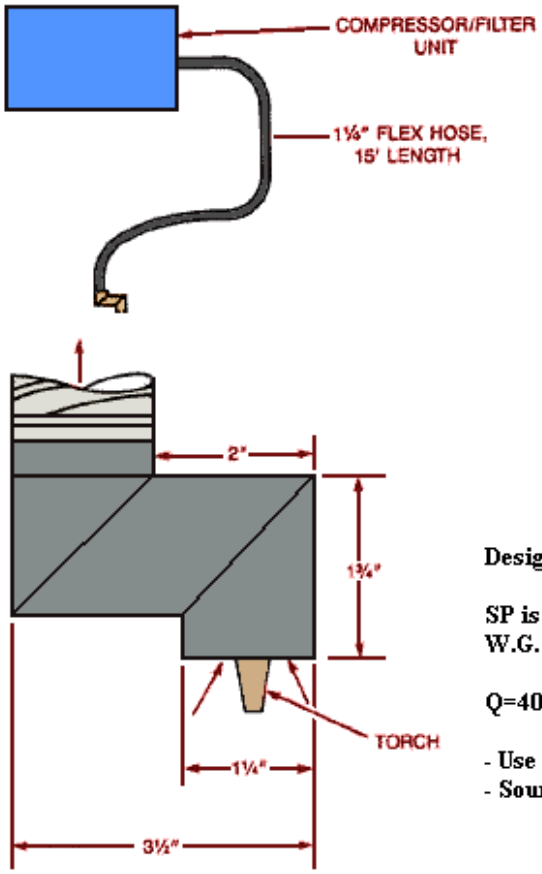

Design Criteria:

SP is greater than or equal to 72" W.G. (inlet)

Q=40 cfm

- Use steel mold
- Source must be within 1" of hood

Image of post burning, portable tool exhaust

Portable Tool Exhaust
(High Velocity/Low Volume)

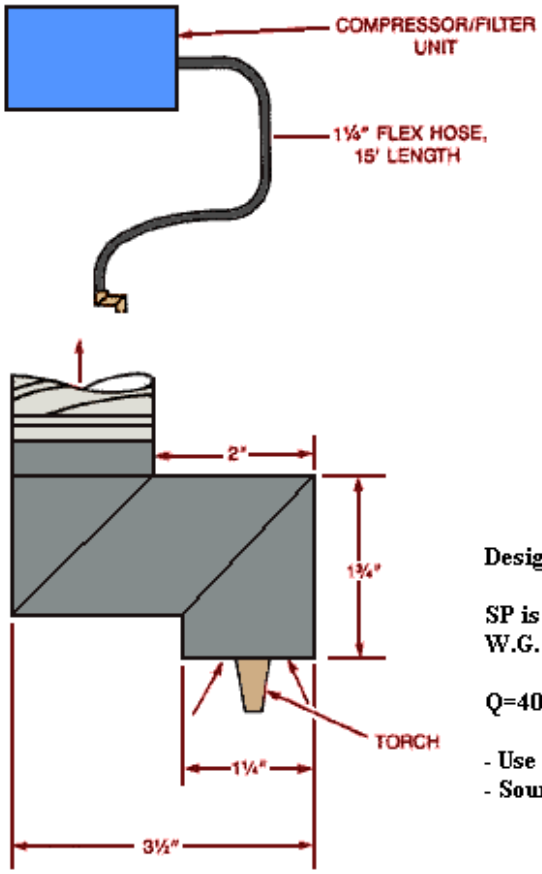

Design Criteria:

SP is greater than or equal to 72" W.G. (inlet)

Q=40 cfm

- Use steel mold
- Source must be within 1" of hood

Image of post burning, portable tool exhaust

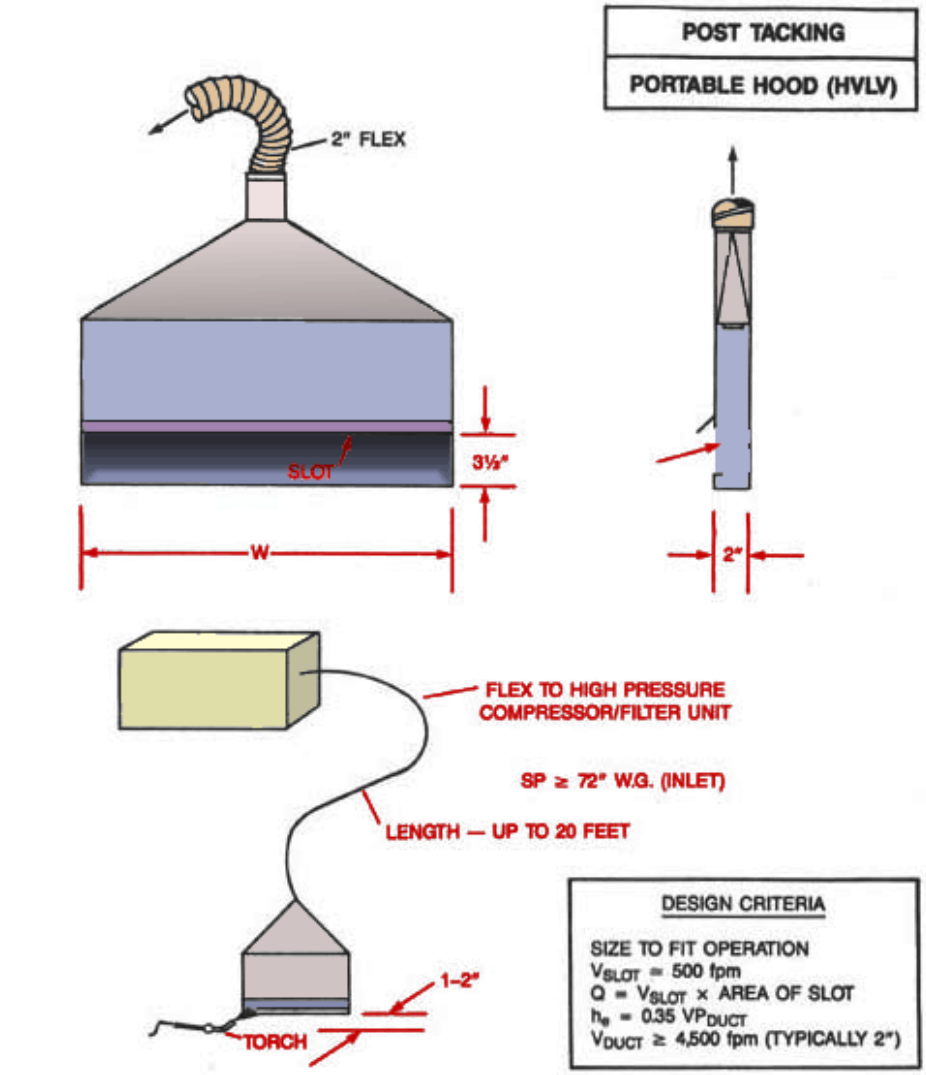

- HOOD MUST COME WITHIN INCHES OF EMISSION SOURCE.
- TORCH FLAME MUST BE DIRECTED AT SLOT.

Image of post tracking, portable hood

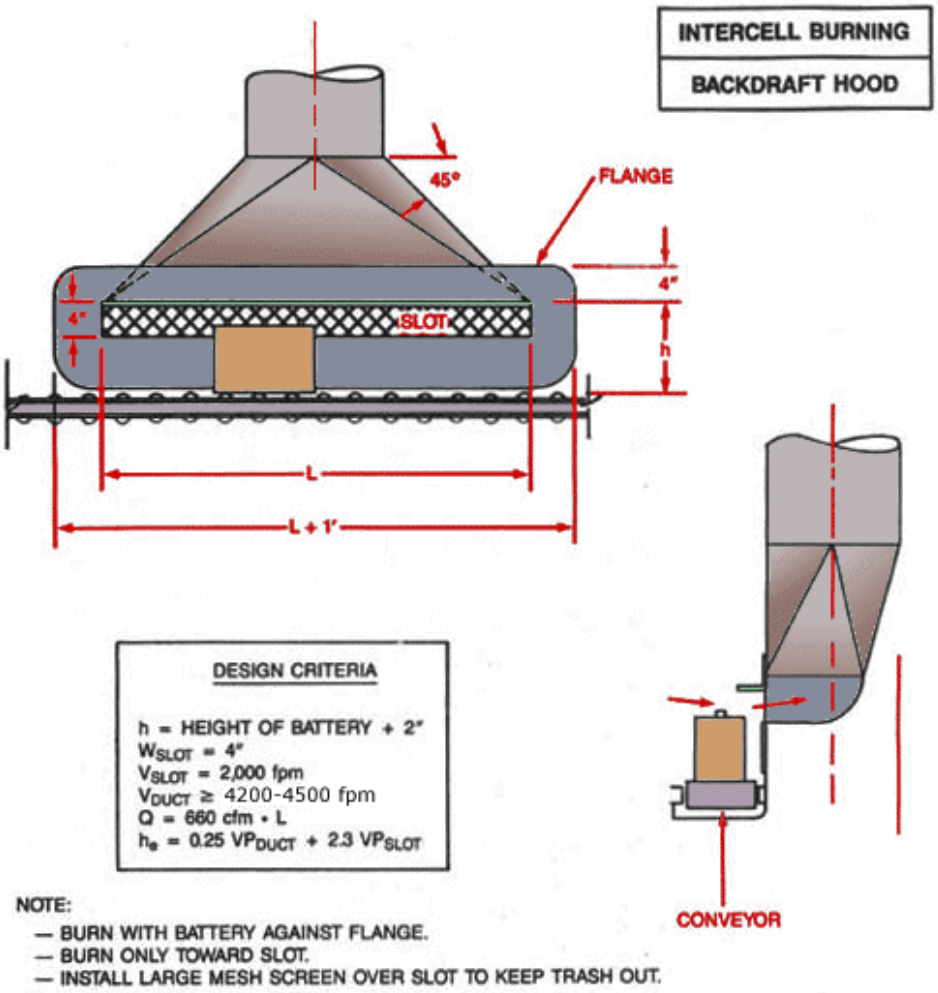

NOTE:
- BURN WITH BATTERY AGAINST FLANGE.
- BURN ONLY TOWARD SLOT.
- INSTALL LARGE MESH SCREEN OVER SLOT TO KEEP TRASH OUT.

Image of post/intercell burning, backdraft hood

Portable Tool Exhaust
(High Velocity/Low Volume)

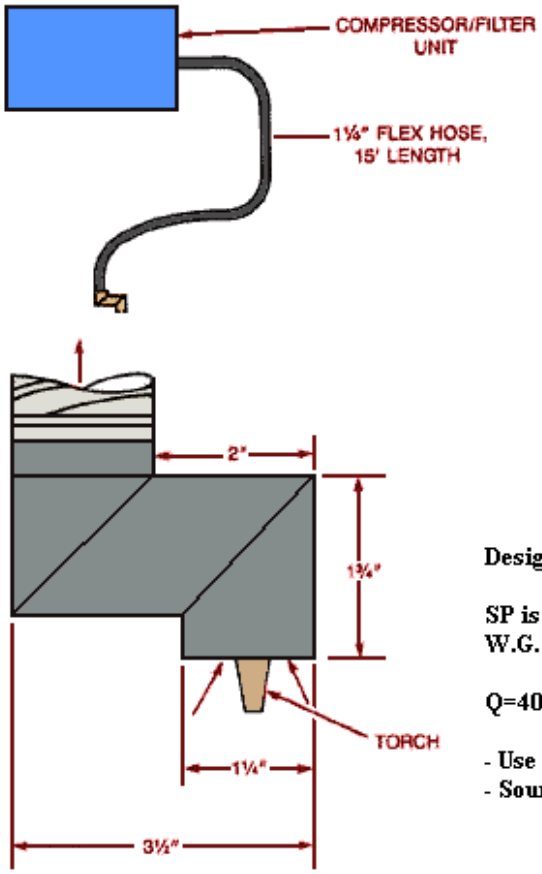

Design Criteria:

SP is greater than or equal to 72" W.G. (inlet)

Q=40 cfm

- Use steel mold
- Source must be within 1" of hood

Image of post burning, portable tool exhaust

Scrap Handling Remelt Pot and Slag/Dross/Skim Hood

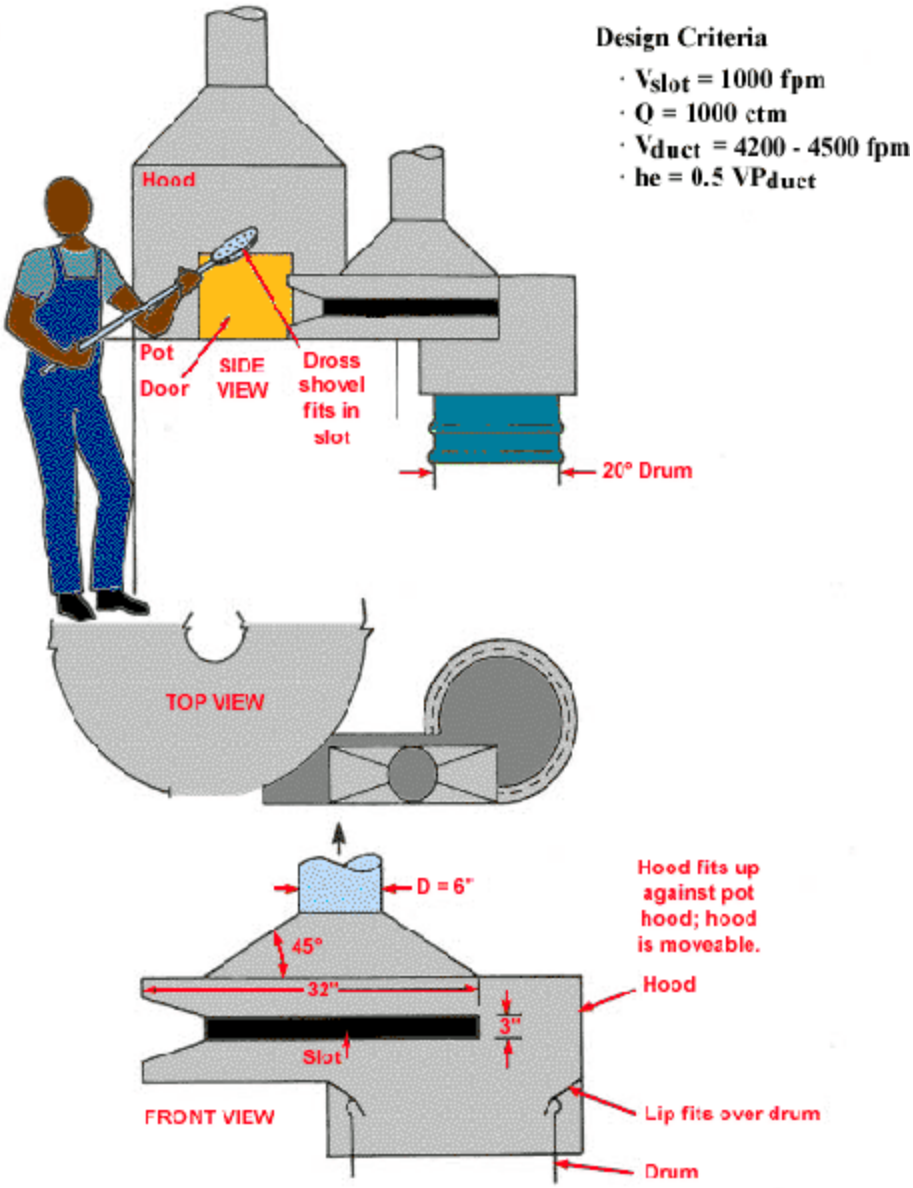

Image of scrap pot and dross hood diagram

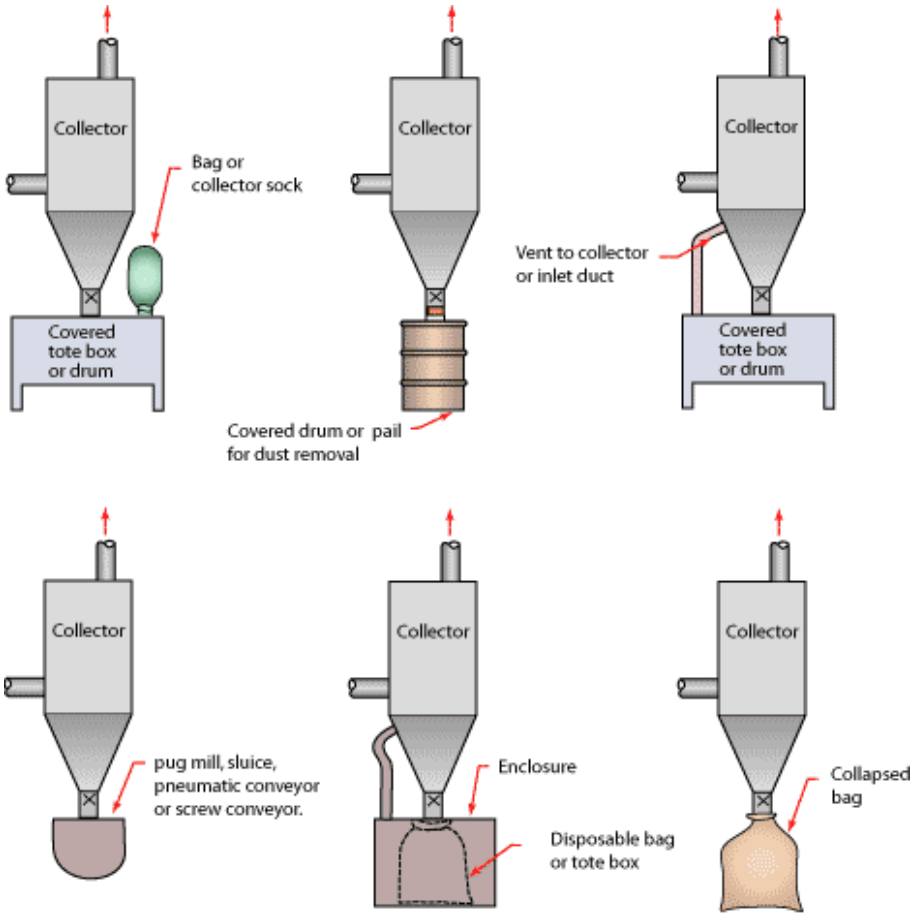

American Conference of Governmental Industrial Hygienists	Date: 3-97
	Figure: 4-1

From American Conference of Governmental Industrial Hygienists (ACGIH®), Figure 4-1, *Industrial Ventilation : A Manual of Recommended Practice*, 23rd Edition. Copyright 1998. Reprinted with permission.

Image of dry type dust collectors dust disposal

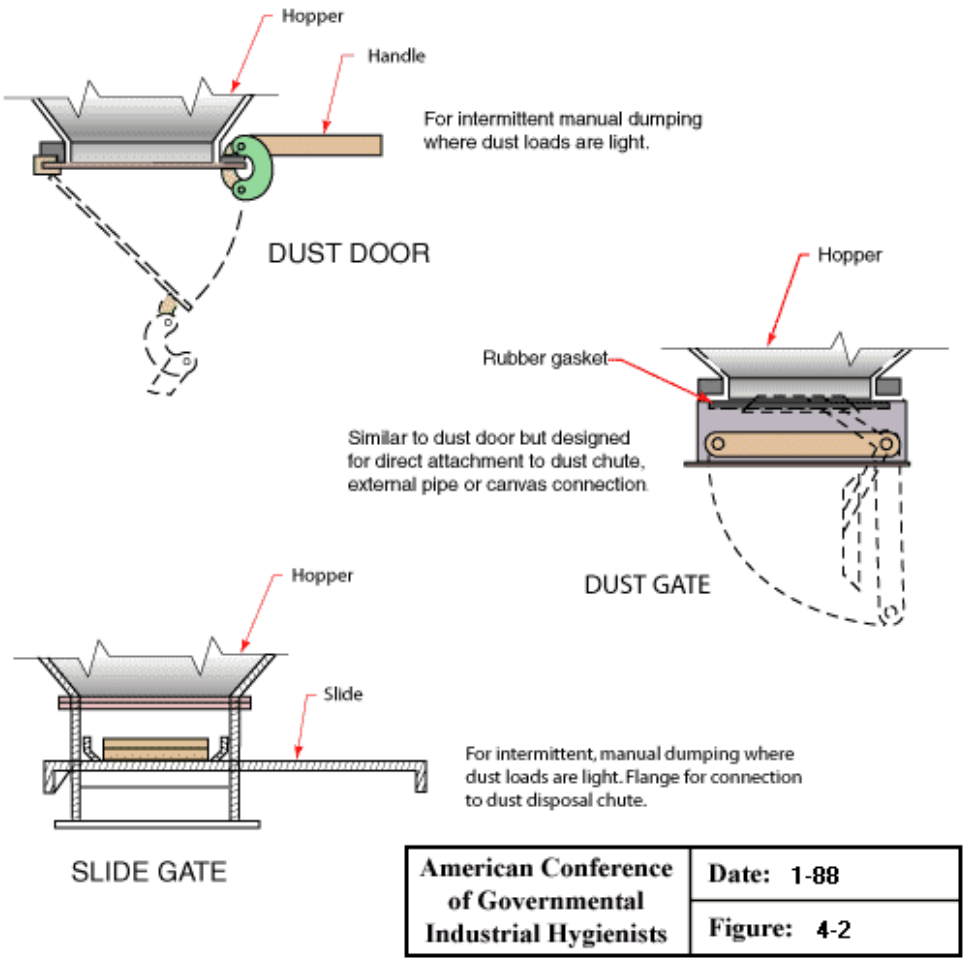

From American Conference of Governmental Industrial Hygienists (ACGIH®), Figure 4-2, *Industrial Ventilation : A Manual of Recommended Practice*, 23rd Edition. Copyright 1998. Reprinted with permission.

Image of dry type dust collectors discharge valves

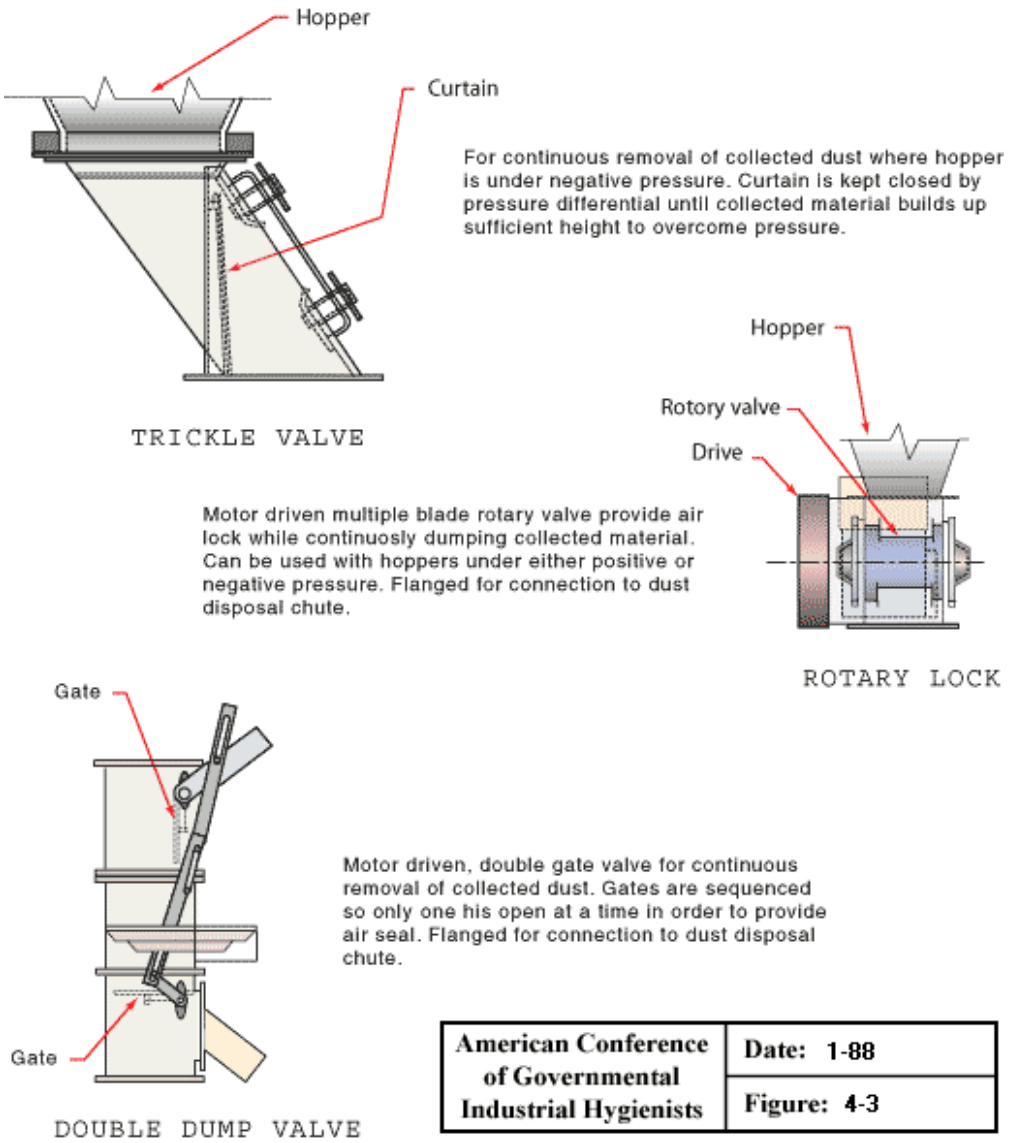

American Conference of Governmental Industrial Hygienists	Date: 1-88
	Figure: 4-3

From American Conference of Governmental Industrial Hygienists (ACGIH®), Figure 4-3, *Industrial Ventilation : A Manual of Recommended Practice*, 23rd Edition. Copyright 1998. Reprinted with permission.

Image of dry type dust collectors discharge valves

Movable Exhaust Hoods

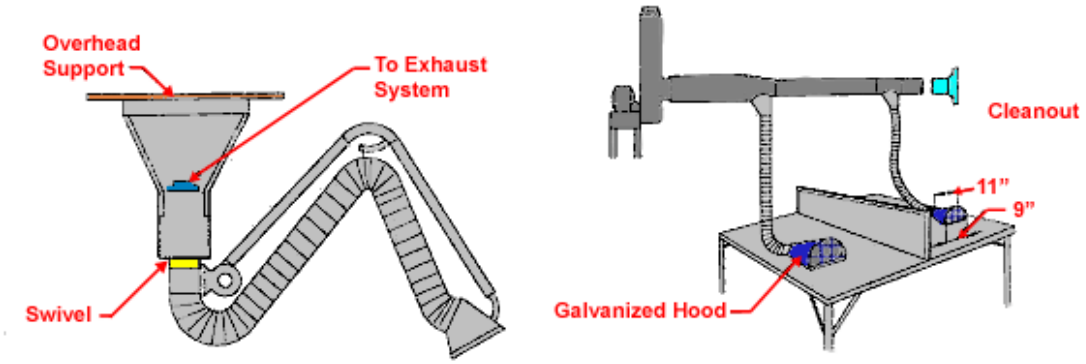

FLEXIBLE EXHAUST CONNECTIONS

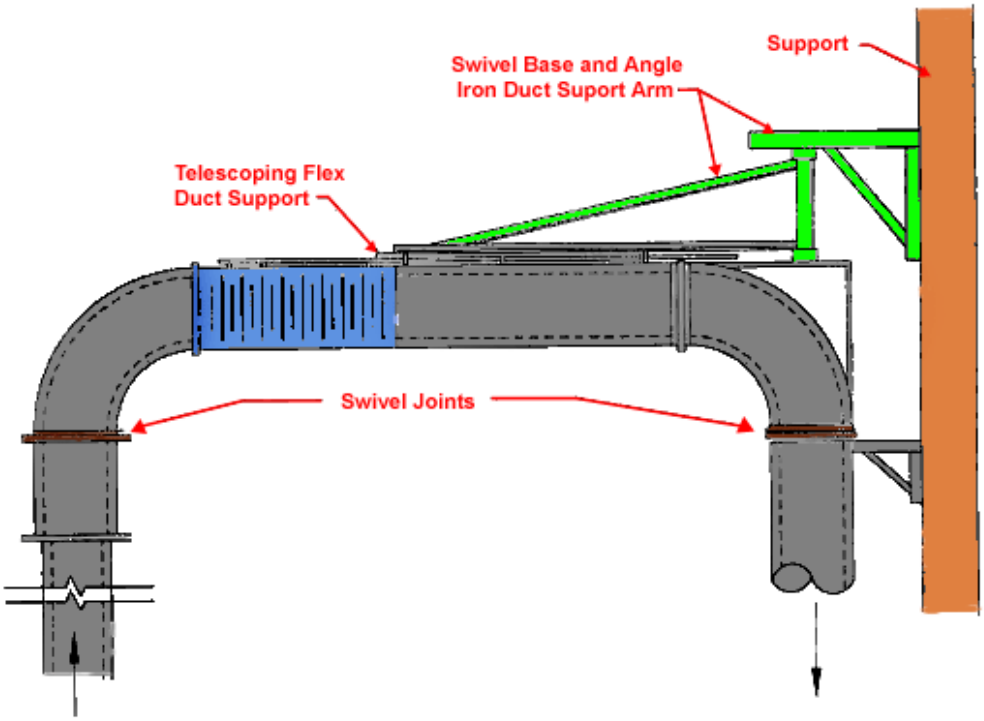

American Conference of Governmental Industrial Hygienists	Date: 02-91
	Figure: VS-65-01

From American Conference of Governmental Industrial Hygienists (ACGIH®), Figure VS-65-01, *Industrial Ventilation : A Manual of Recommended Practice*, 23rd Edition. Copyright 1988. Reprinted with permission.

Image of moveable exhaust hood diagram

Workbench

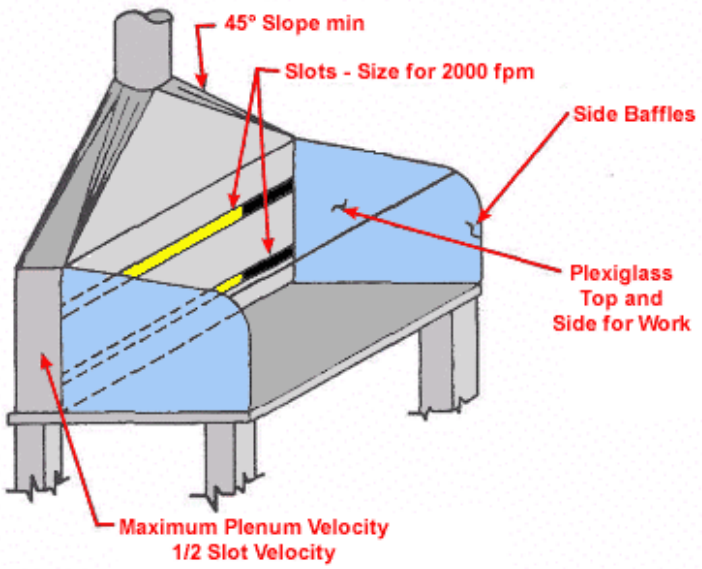

Design Criteria

- Q = 350 cfm/lineal ft of hood
- Hood length = required working space
- Bench width = 24" maximum
- Duct velocity ≥ 4,200 - 4500 fpm
- $h_e = 1.78\ VP_{slot} + 0.25\ VP_{duct}$

Image of workbench diagram

Typical System
Low Volume - High Velocity

	cfm	I.D. Plastic Hose Size (inches)
Disk sanders 3–9 inch diam.	60–175	1–1.5
Vibratory pad sander – 4"x9"	100	1.25
Router, 1/8"–1"	80–100	1–1.25
Belt sander 3"–4000 fpm	70	1
Pneumatic chisel	60	1
Radial wheel grinder	70	1
Surface die grinder, 1/4"	60	1
Cone wheel grinder	90	1.25
Cup stone grinder, 4"	100	1.25
Cup type brush, 6"	150	1.5
Radial wire brush, 6"	90	1.25
Hand wire brush 3" x 7"	60	1
Rip out knife	175	1.5
Rip out cast cutter	150	1.5
Saber saw	120	1.5
Swing frame grinder 2" x 18"	380	2.5
Saw abrasive 3"	100	1.25

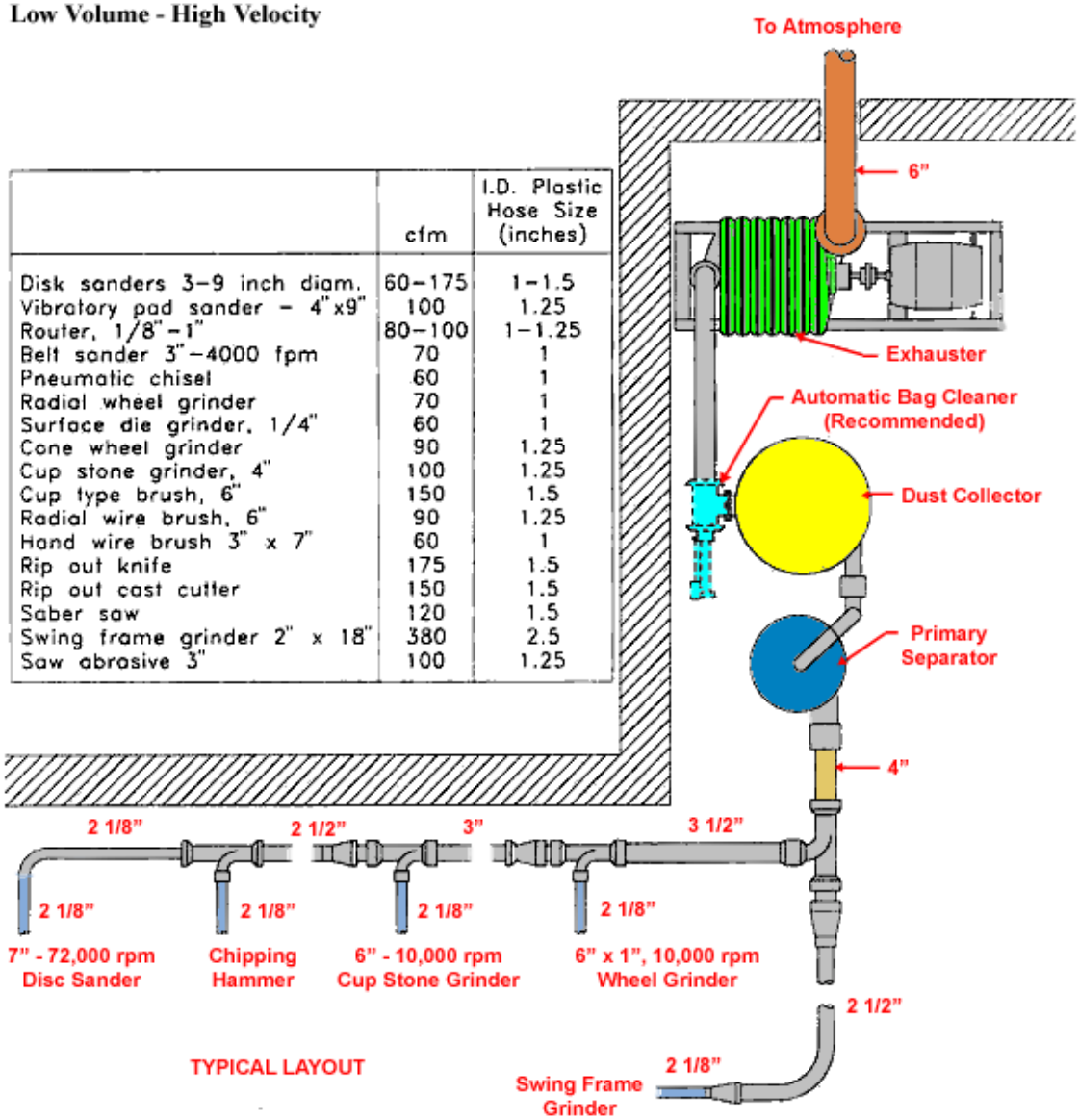

TYPICAL LAYOUT

American Conference of Governmental Industrial Hygienists	Date: 10 - 90
	Figure: VS - 40 - 20

System Notes

Bell and socket, smooth - flow type tubing and fittings should be used throughout the system.

When system is used for vacuum cleaning of abrasive materials. Schedule No140 pipe and cast iron drainage fittings, or heavier, should be used in place of tubing.

From American Conference of Governmental Industrial Hygienists (ACGIH®), Figure VS-40-20, *Industrial Ventilation : A Manual of Recommended Practice*, 23rd Edition. Copyright 1988. Reprinted with permission.

Image of typical system, low volume - high velocity

Hood for Cup Type Surface Grinder and Wire Brushes

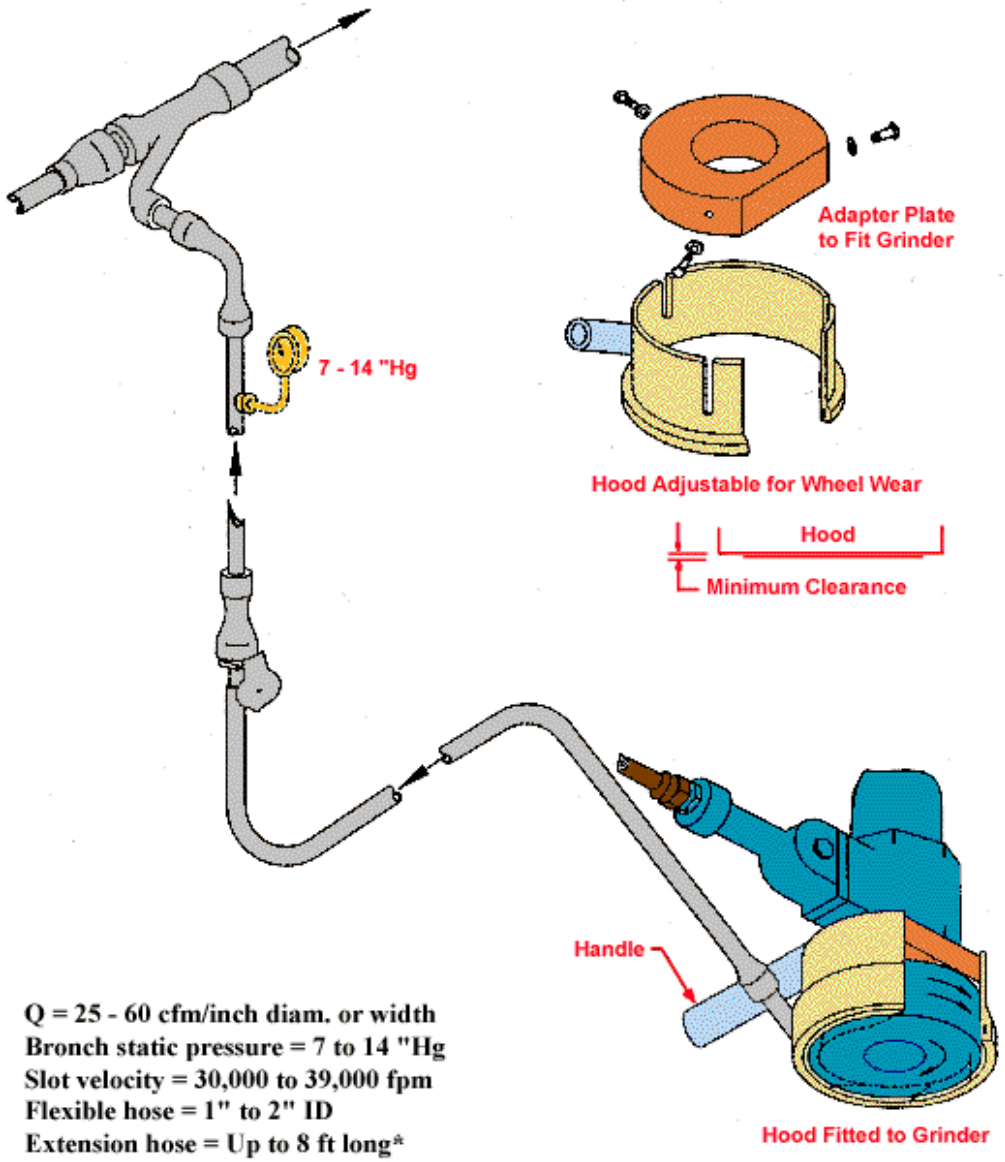

Q = 25 - 60 cfm/inch diam. or width
Bronch static pressure = 7 to 14 "Hg
Slot velocity = 30,000 to 39,000 fpm
Flexible hose = 1" to 2" ID
Extension hose = Up to 8 ft long*
Peripheral speed = 6,000 to 12,000 linear fpm

***Hose lengths may be extended up to a maximum of 50 ft by using larger sizes between the tool hose and the tubing system.**

American Conference of Governmental Industrial Hygienists	
Date: 10-90	Figure VS-40-02

Image of surface grinder and wire brush hood diagram

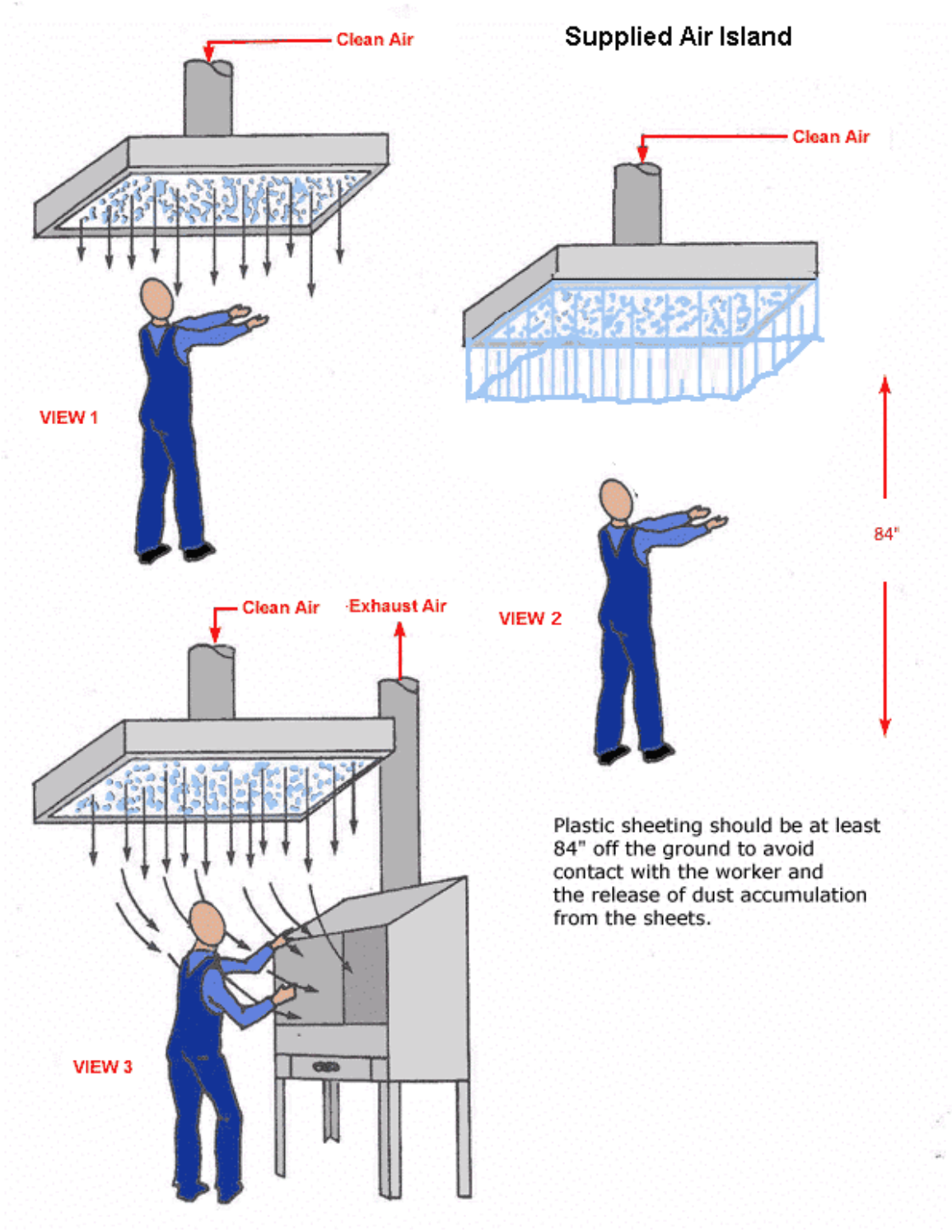

Image of supplied air island diagram

Portable Tool Exhaust
(High Velocity/Low Volume)

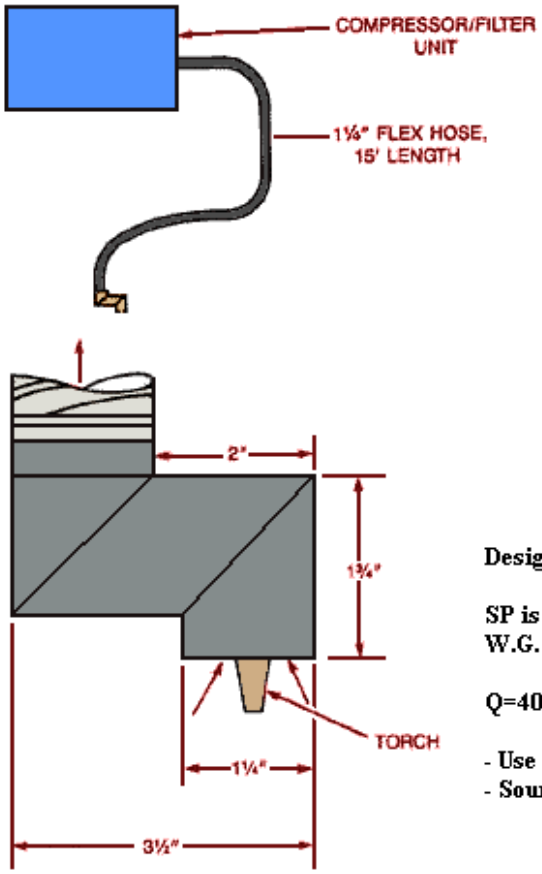

Design Criteria:

SP is greater than or equal to 72" W.G. (inlet)

Q=40 cfm

- Use steel mold
- Source must be within 1" of hood

Image of post burning, portable tool exhaust

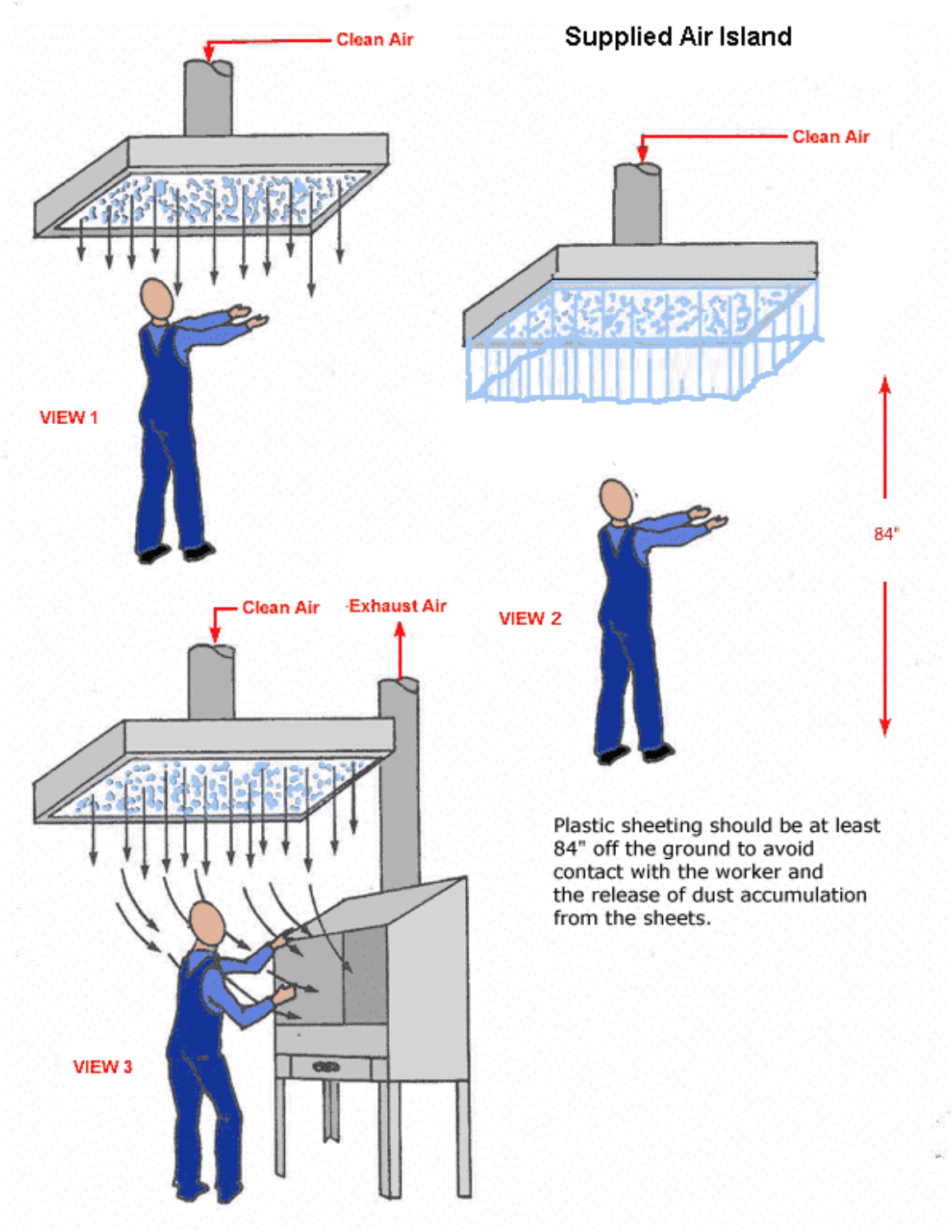

Image of supplied air island diagram

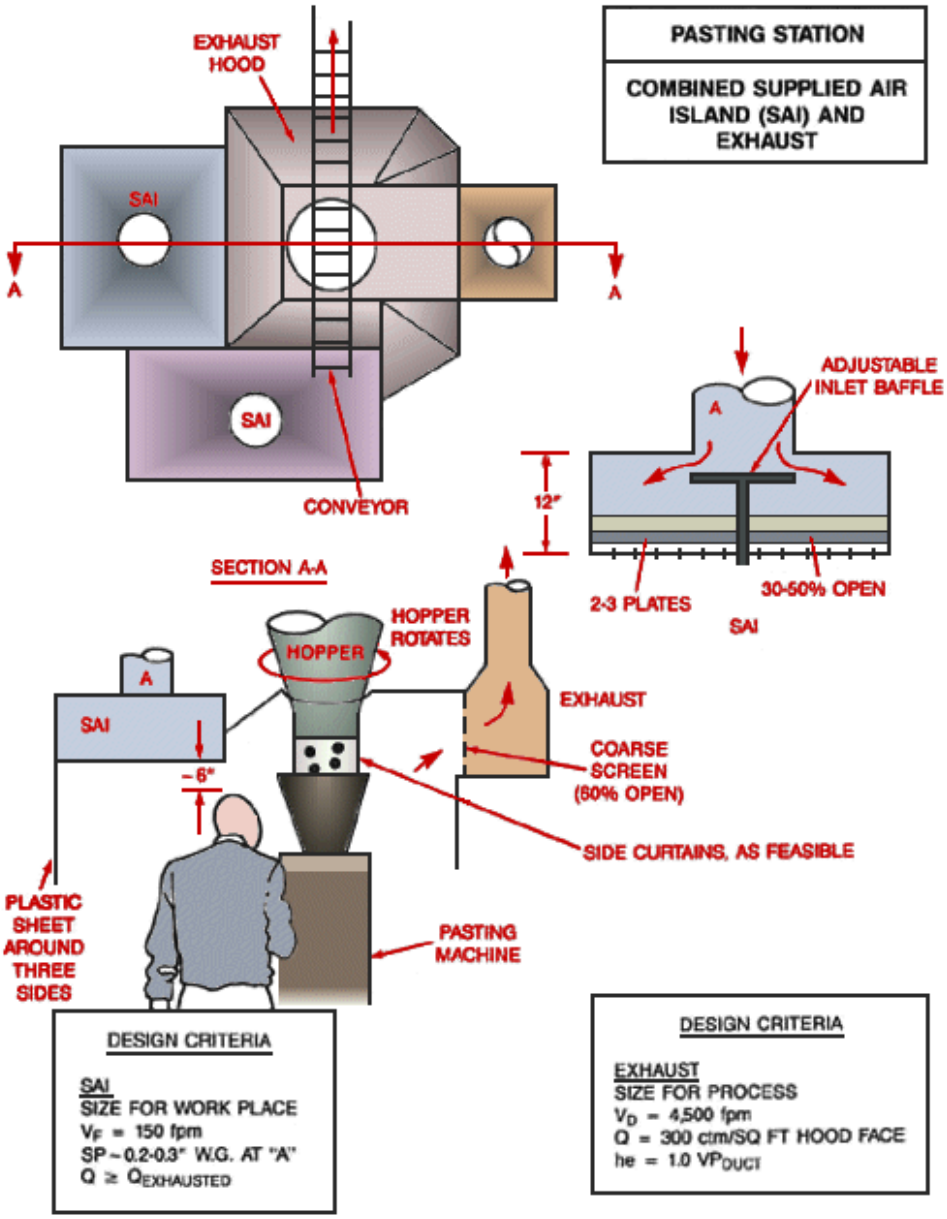

Image of pasting station, combined supplied air and exhaust diagram

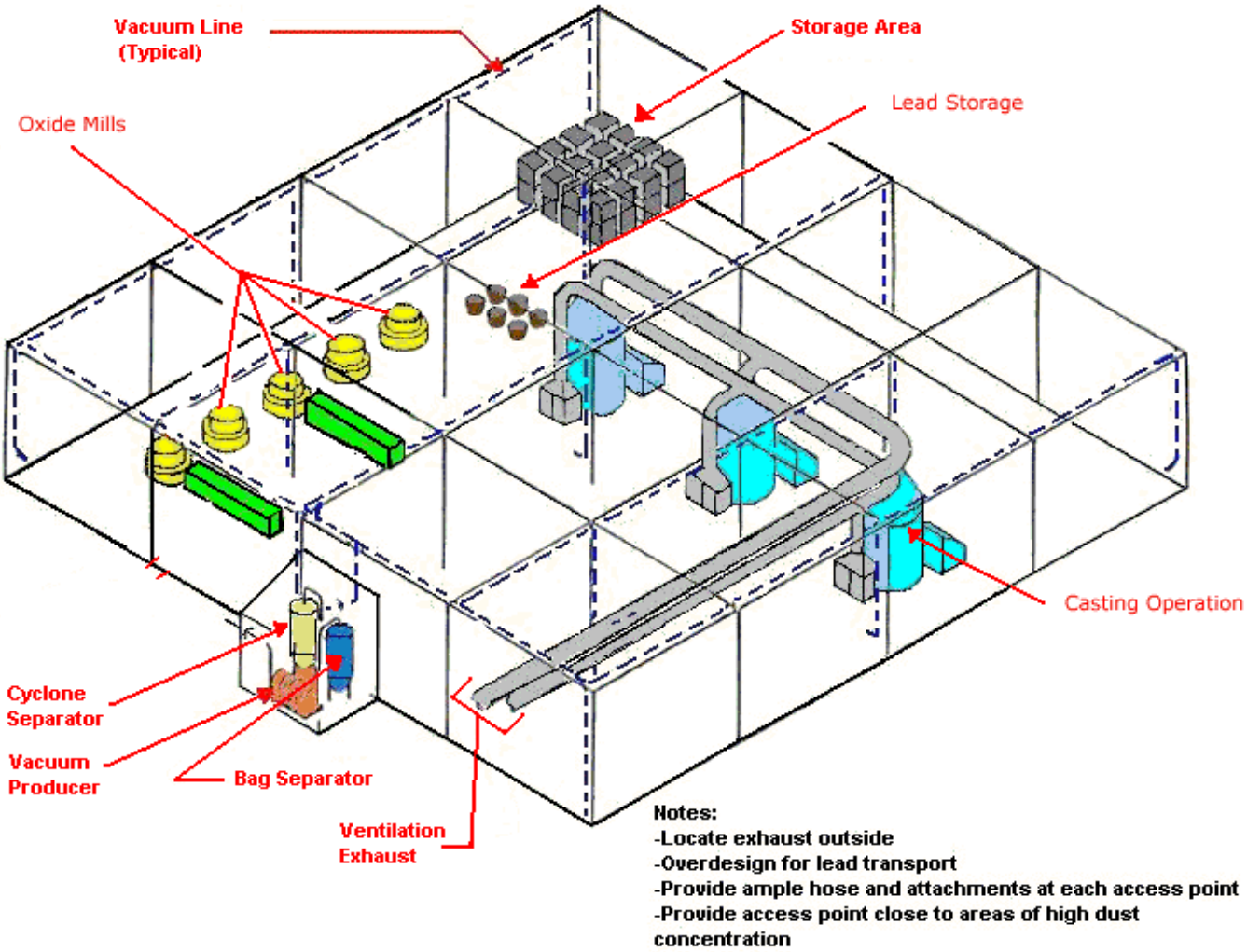

Image of central vacuum system diagram

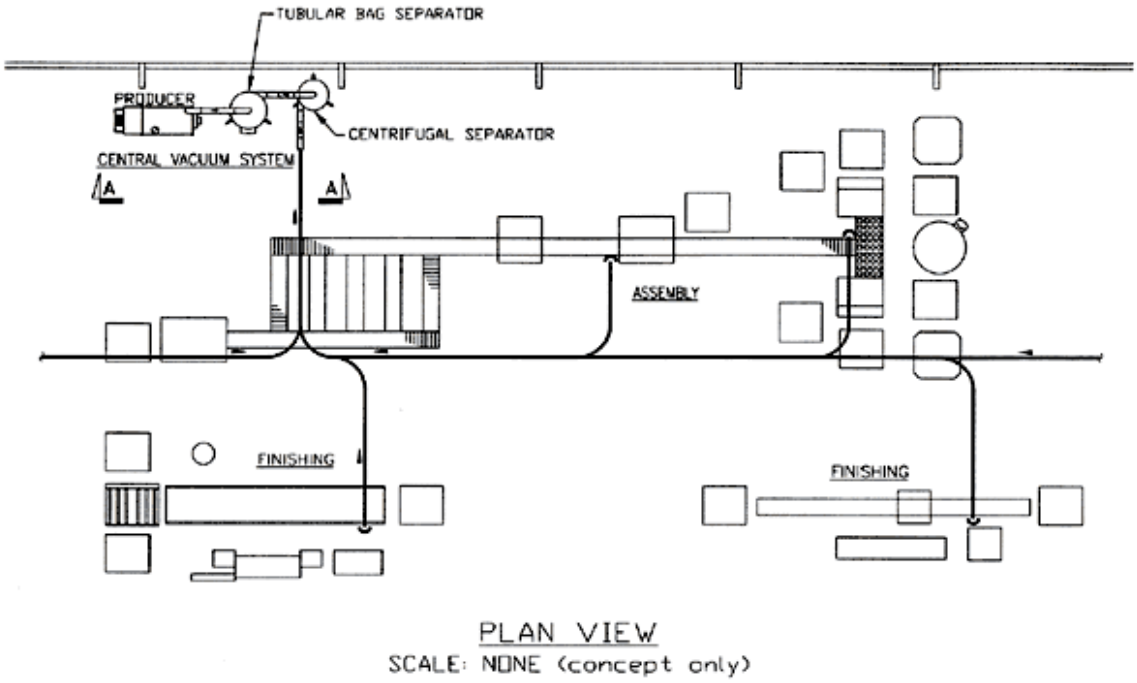

Plan view of central vacuum system

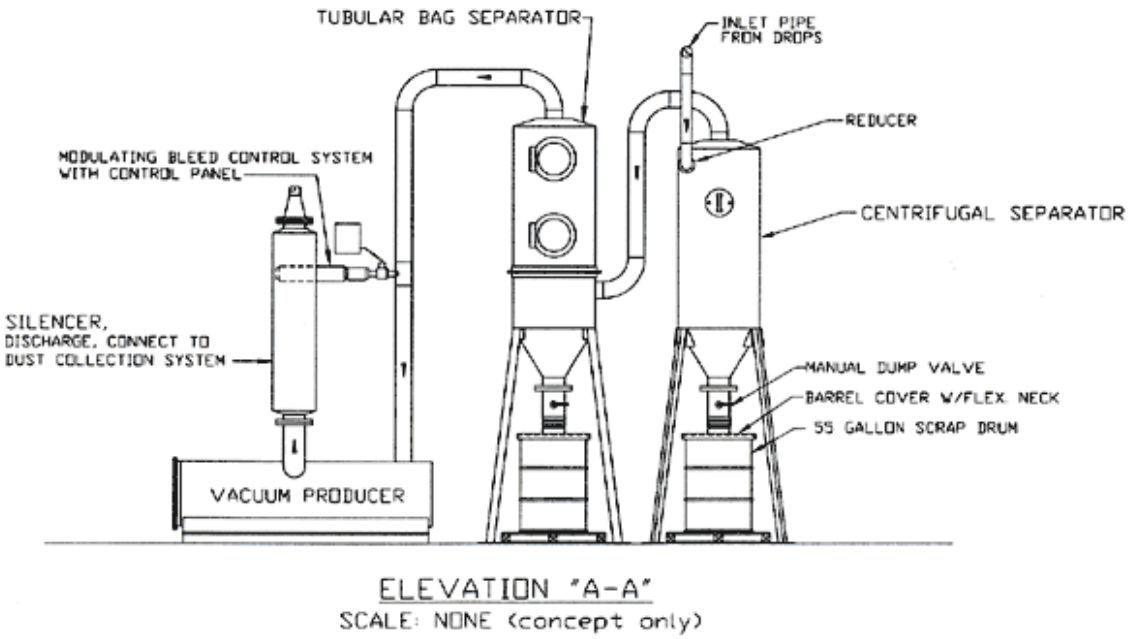

Elevation view of central vacuum system

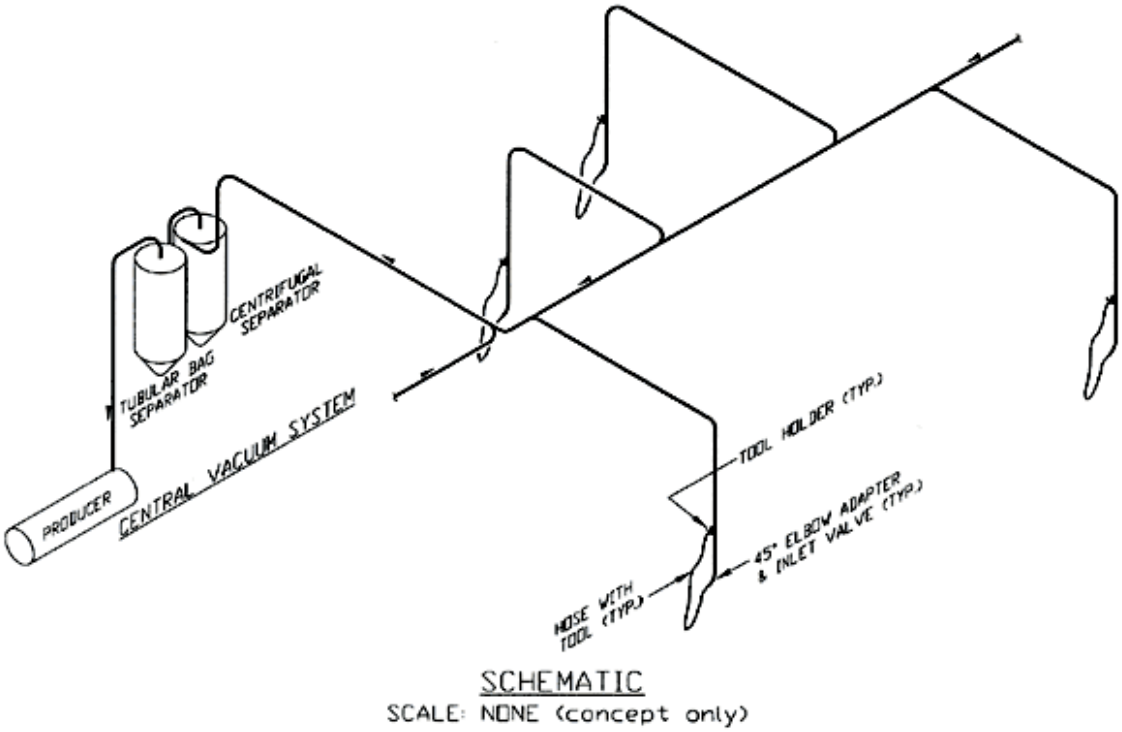

Schematic view of central vacuum system

Boot Wash Station

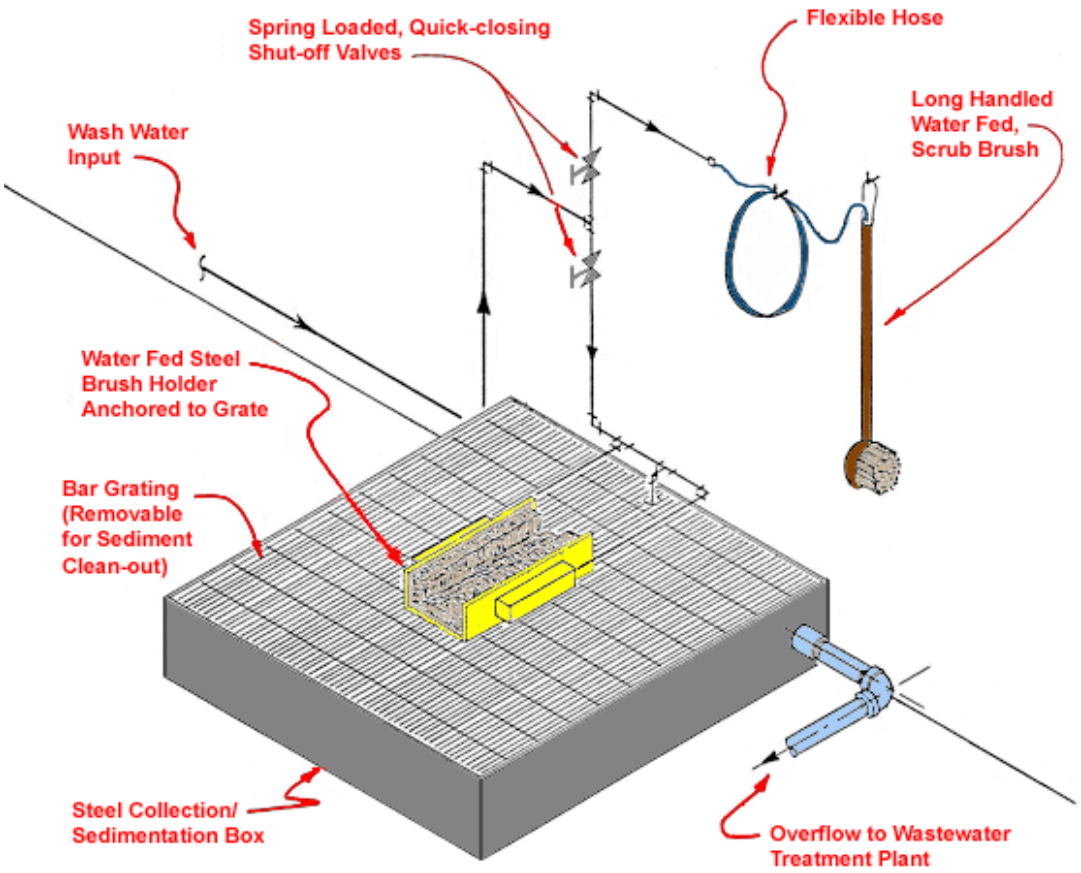

Image of boot wash station diagram

Shoe Cleaning Machine

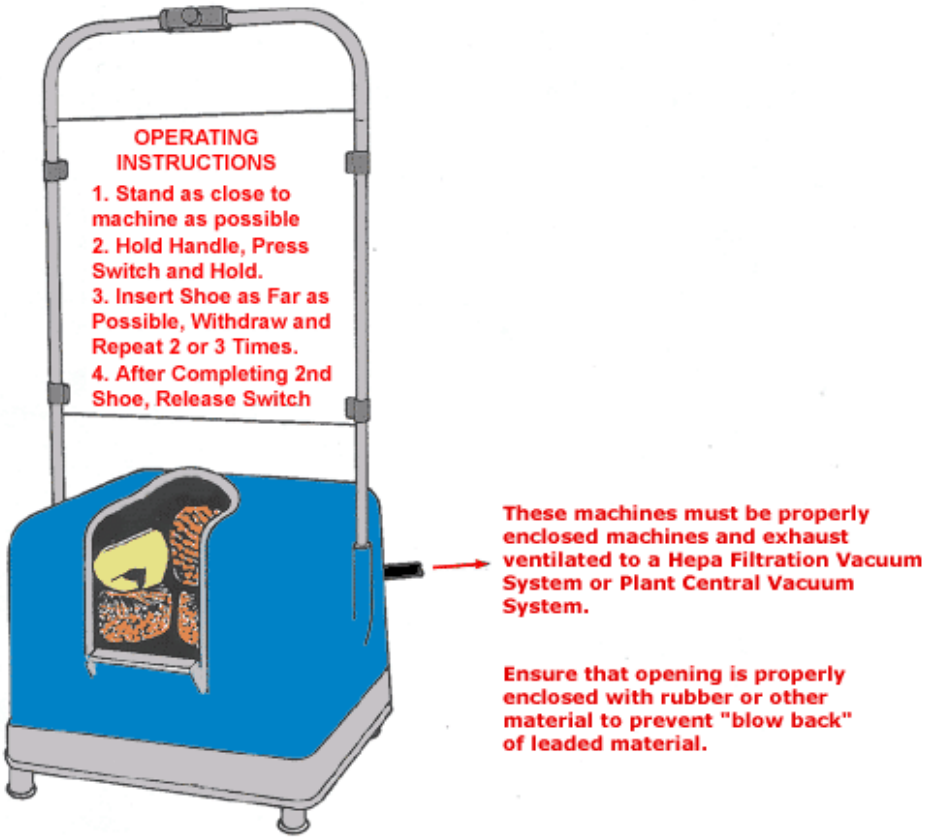

Image of shoe cleaning machine

Clothes Cleaning Air Shower

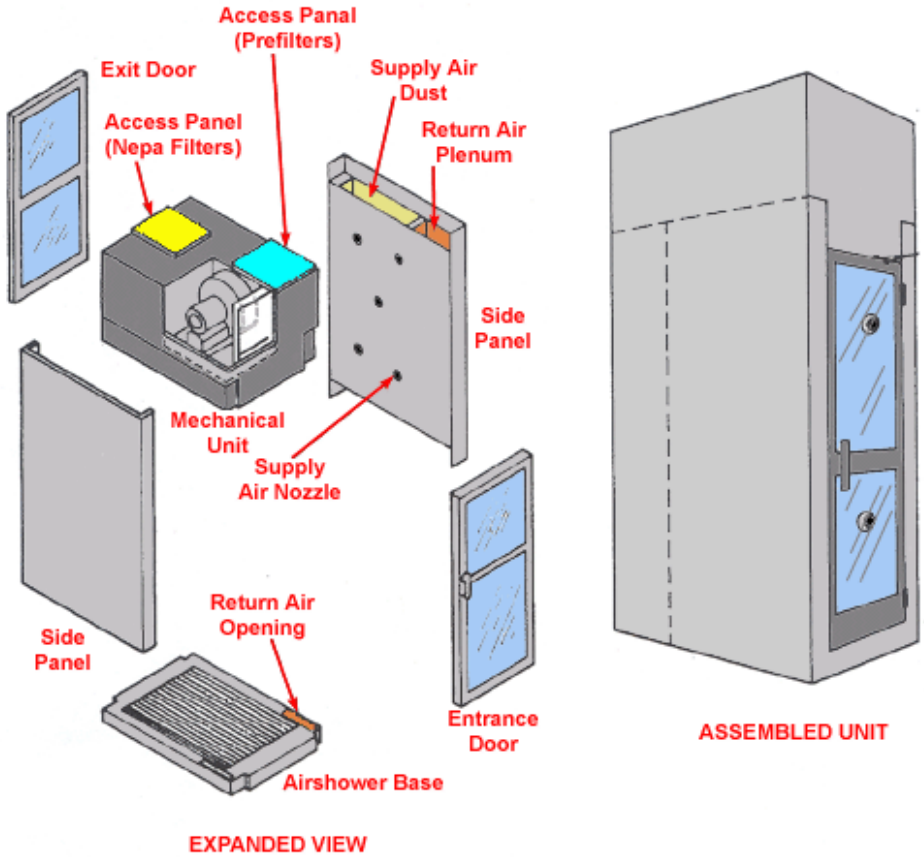

Design Characteristics

- Check with supplier.

Application Tips

- Install at entrance to clean-rooms, lunchroom, etc.
- Allow time for full use by employees.
- Provide daily cleaning and maintenance.

Image of clothes cleaning air shower diagram

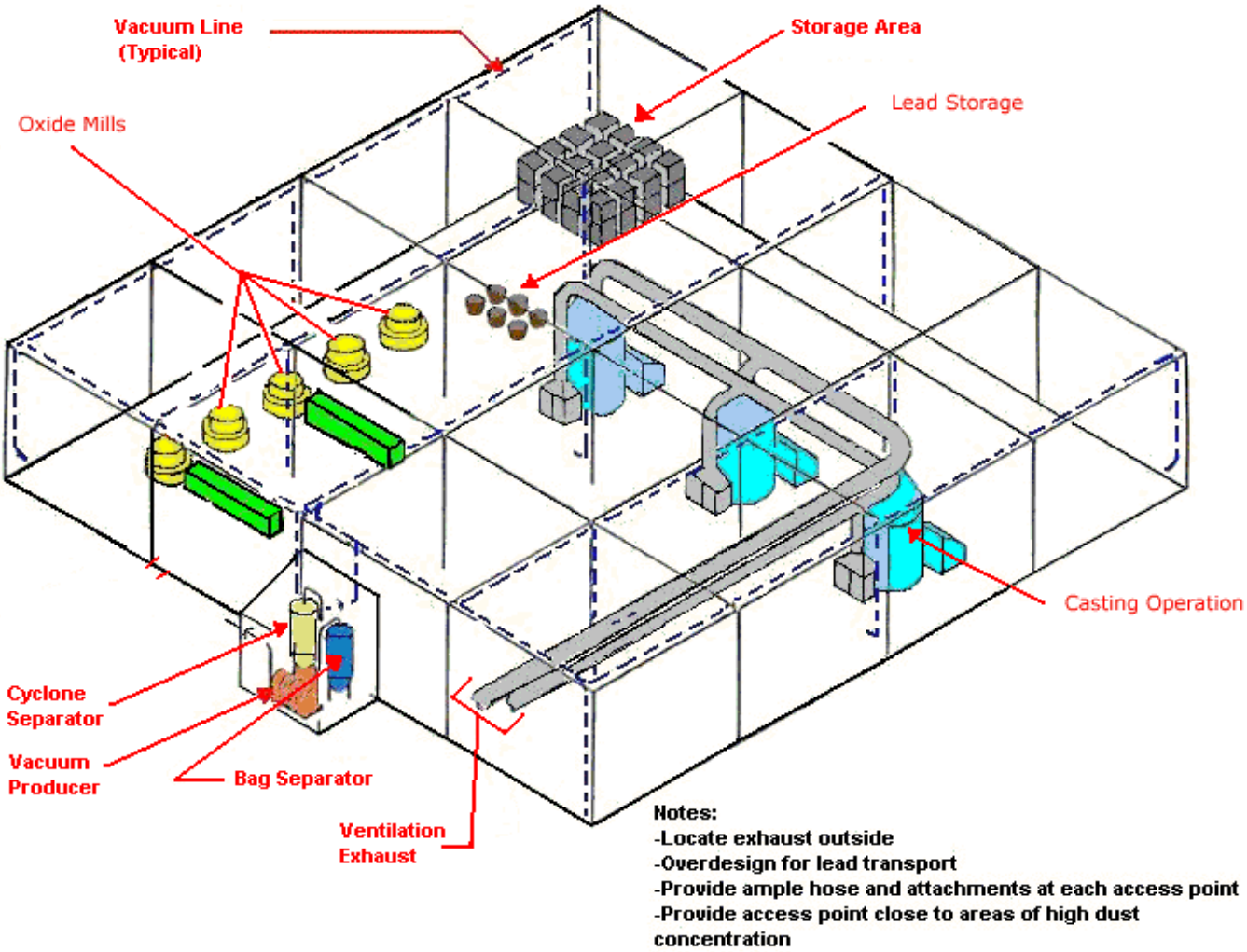

Image of central vacuum system diagram

Mobile Vacuum

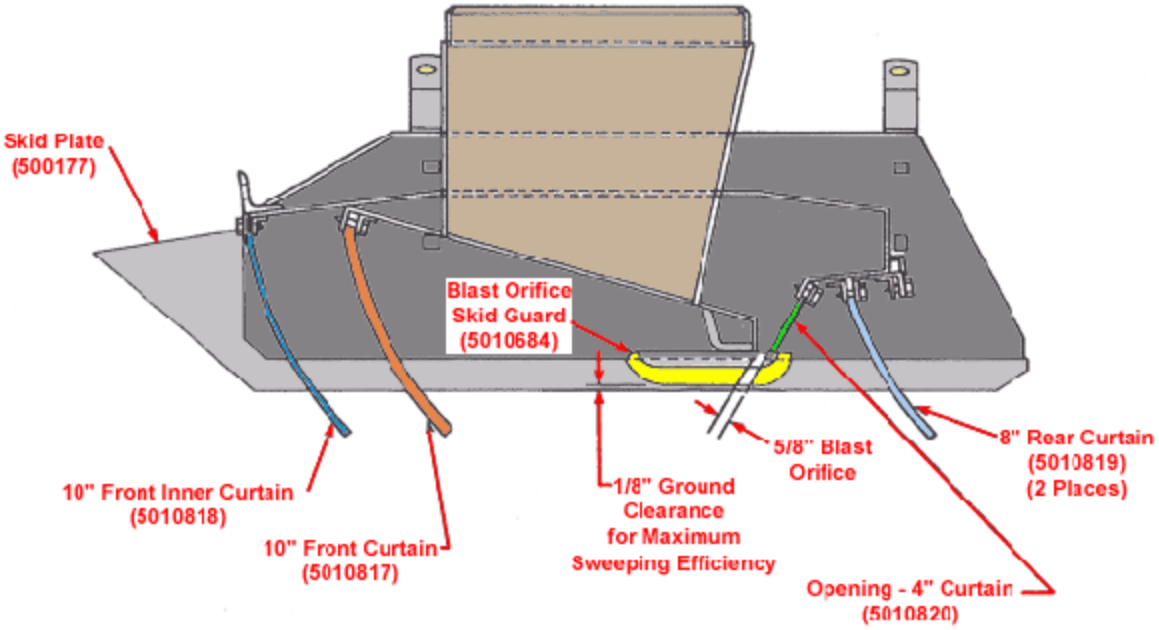

CROSS SECTION

NOTE: Suction Baffle
(5010832) Not Shown

Image of vacuum truck diagram

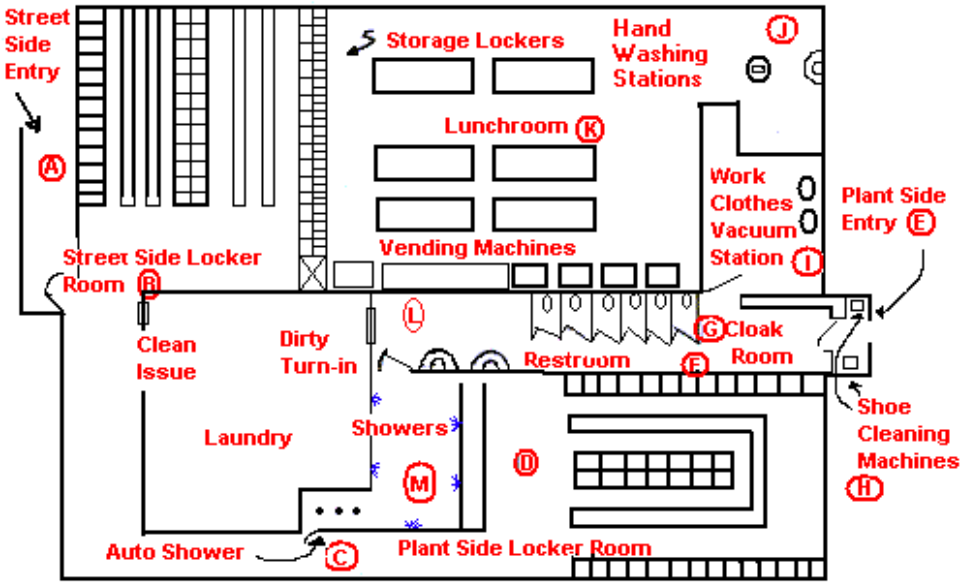

Facility Function / Description

1. The facility can be entered from the street at only one point. (A)
2. Street clothes are removed and clean work clothes, hardhat, and respirator are issued and donned in the street side locker room. (B)
3. The employee passes through a one-way turnstile in order to get to the plant-side locker room. (C)
4. The employee dons work boots and other safety gear in the plant-side locker room where they are stored. (D)
5. There is only one entry to the plant. (E)
6. The restroom just inside the cloak room is readily accessible during working hours. (F)
7. The cloak room provides a place to store coats, hardhats, gloves and respirators during break periods. (G)
8. During lunch break the employee first cleans his boots at the shoe cleaning machines (H), leaves coat and equipment in the cloak room (G), vacuums off his clothes at the vacuum stations (I), proceeds to the hand washing station where he thoroughly washes his hands (J), and finally enters the lunch room. (K)
9. At the end of the shift the procedure is as follows: the employee cleans shoes (H), removes contaminated clothing in the plant side locker room (D), stores boots, etc. in plant-side lockers, turns in dirty work clothes, hardhat and respirator to laundry (L), and proceeds to the showers. (M) He then must pass through an automatic shower (N) to return to the street-side locker room (B), where he dresses and leaves the faculty. (A)

Image of hygiene facility diagram

Clothes Cleaning Air Shower

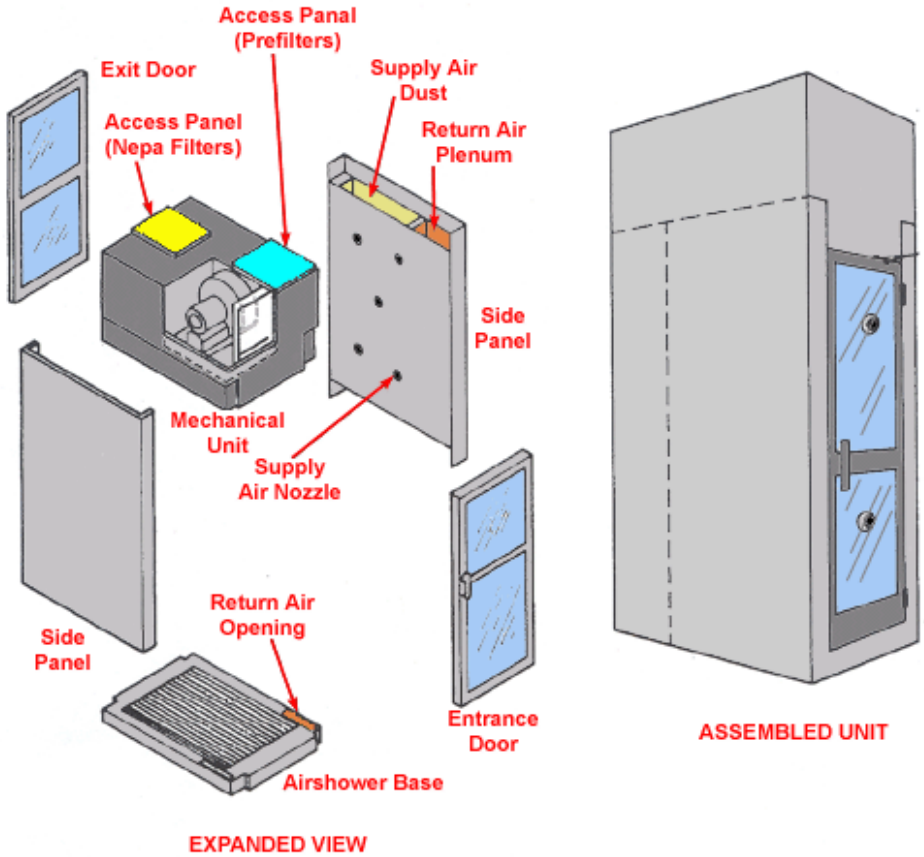

Design Characteristics

- Check with supplier.

Application Tips

- Install at entrance to clean-rooms, lunchroom, etc.
- Allow time for full use by employees.
- Provide daily cleaning and maintenance.

Image of clothes cleaning air shower diagram

Lead Battery Manufacturing

Engineering Controls > Supplied Air Island and Clean Air Rooms

There are two types of clean air systems that can be used for battery manufacturing operations:

1. Laminar Flow (Supplied-Air) Island Systems
2. Clean Air Room

Both systems:

- Protect the worker from exposure to contaminated background air.
- Help propel dust produced at the workstation away from the operator's breathing zone.

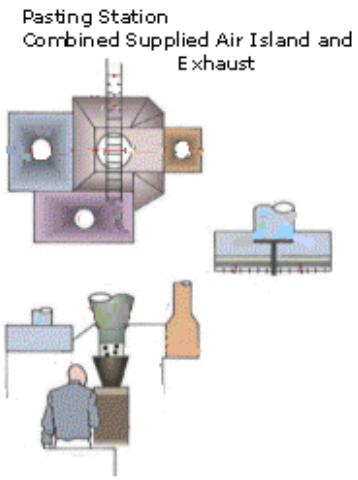

View larger image of fixed supplied air island diagram

Laminar Flow (Supplied-Air) Island Systems

Laminar flow (supplied-air) islands (SAI) provide a zone of clean air at a workstation. The supplied air may come from outside the plant or the air may be filtered plant air.

Laminar flow (supplied-air) islands are especially useful in limiting lead exposure when:

- An employee remains in a stationary position at the workstation for long periods of time. The SAI provides an envelope of clean air to a worker. The clean air flows down over the worker which normally keeps factory air from entering the clean air core.
- A supply of fresh, clean air is available. Note: Outside air may not require cleaning and costs will be lower. If no outside source of clean air is available, intake air should be filtered.
- The air is tempered. Employees will not remain in an environment that is too hot or too cold. Note: If the air is not tempered employees will block off the air flow with cardboard or other material in the winter or try to increase the flow for cooling in the summer which could result in higher exposures.

Laminar Flow (Supplied Air) Islands are not always necessary if adequate capture velocity is provided to control airborne lead.

Design Specifications

The laminar flow (supplied-air) island (SAI) should be designed to provide a laminar flow of

Safety and Health Topics Page
Oxide and Grid Processing
Plate Processing
Battery Assembly
Battery Repair and Reclaim
Environmental Controls
Maintenance
Engineering Controls
Local Exhaust Ventilation Diagrams
Laminar Flow (Supplied Air) Islands
Central Vacuum System
OSHA Lead Requirements...
Source Identification Protocol

fresh air through the employee's breathing zone at a low enough velocity so that additional airborne lead dust is not generated through reentrainment.

View larger image of supplied air island

- The SAI height is typically 80 inches from the floor but is often restricted by overhead clearance limits and other equipment installed in the area. If curtains are used to extend the length of the SAI they should not extend lower than 84 inches from the floor level to prevent workers from disturbing dust collected on the curtains.

- The air flow is designed so that the velocity measured at the employee's breathing zone is 100-150 feet per minute. Higher velocity may stir up lead dust.

- SAIs can be used in conjunction with exhaust-ventilated work benches. In this case, the air should be balanced so that make-up air is provided equal to the amount of the exhaust air.

back to top

Clean Air Room

Perform the following to ensure clean air rooms are free of lead contaminants:

- Vacuum enclosures and scrub them with soap and water so lead dust does not collect on flat surfaces.

- Ensure that the structural integrity of all enclosures are intact and under positive pressure at all times.

- Develop a preventive maintenance checklist that includes schedules for:
  - Replacing ventilation system filters.
  - Replacing ventilation system hoses, clamps, and blower internal parts.
  - Replacing window and door moldings.
  - Checking and replacing air shower ventilation systems, including automatic doors, blower, nozzles, and lighting.
  - Monitoring intake and exhaust airflow to ensure that the rooms are under positive pressure at all times.

Design Specifications

Using clean air rooms can effectively lower lead exposure. They can be used for oxide mill or paste mix operators. Some clean air rooms are used as lead-free environments where employees can remove their respirators.

- These rooms need to have positive pressure, be tempered, and have a filtered air system with a HEPA filter designed to remove 99.97 percent of lead dust greater than 0.3 micron in diameter.

- An ante room should be included to give employees a place to remove their protective equipment without spreading contamination in the clean air rooms.

back to top

Lead Battery Manufacturing

Safety and Health Topics Page

Oxide and Grid Processing
Plate Processing
Battery Assembly
Battery Repair and Reclaim
Environmental Controls
Maintenance
Engineering Controls
Local Exhaust Ventilation Diagrams
Laminar Flow (Supplied Air) Islands
Central Vacuum System
OSHA Lead Requirements...
Source Identification Protocol

Engineering Controls > Central Vacuum System

A central vacuum system is used by plant personnel to remove lead oxide dust from their workstations. Tools can also be connected the system to capture dust at the source of generation for some operations, such as grinding.

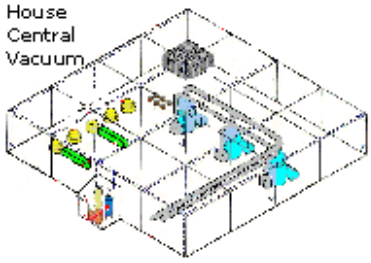

View larger image of central vacuum system diagram

Central Vacuum System

Design Specifications

Design of a central vacuum system depends on the number of active work points (hoses and tools) operating at the same time that is desired. Sometimes, the system would be very large and expensive if the number of active points is high. The size and cost of the system can be reduced by:

- Staggering the clean-up period.
- Minimizing the number of active stations used at any one time.

Manufacturers and vendors of the equipment will size the vacuum unit, filter or bag unit, centrifugal separator, and bleed control with a silencer to suit the final number of work points.

If a drawing or dimensional sketch is provided to the supplier, most suppliers will size the collection system, tubing, fittings, and headers, along with the type and number of fittings required to match the application.

The choice of the length and type of hose, along with the type of tools needed, depend on the workstation. Suppliers can provide listings of available accessories, shutoff valves, tools, and hoses.

To have an efficiently operating system, the installation of the equipment should conform to the supplier's instructions. All piping, work points, and valves should be properly supported.

Diagrams

- Central Vacuum System Diagram
- Plan view of central vacuum system
- Elevation view of central vacuum system
- Schematic view of central vacuum system

back to top

Lead Battery Manufacturing

OSHA Lead Requirements for PPE, Housekeeping, and Hygiene Facilities

The OSHA Lead Standard addresses specific requirements for the following:

- Protective Clothing and Equipment
- Housekeeping
- Hygiene Facilities

Locker room

Safety and Health Topics Page
Oxide and Grid Processing
Plate Processing
Battery Assembly
Battery Repair and Reclaim
Environmental Controls
Maintenance
Engineering Controls
OSHA Lead Requirements...
Protective Clothing and Equipment
Housekeeping
Hygiene Facilities
Source Identification Protocol

Lead Battery Manufacturing

OSHA Lead Requirements for PPE, Housekeeping, and Hygiene Facilities > Protective Work Clothing and Equipment

Appropriate personal protective equipment and clothing limits lead exposure. This sections outlines OSHA's requirements for clothing and equipment.

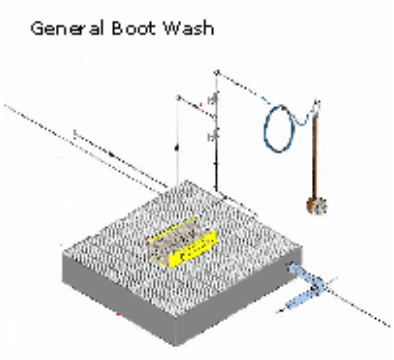

View larger image of boot wash station diagram

Clothing and Equipment

- The following protective clothing and equipment must always be used when lead levels are above the PEL: [1910.1025(g)(1)] (Figure 1)
  - Coveralls or similar full-body work clothing; [1910.1025(g)(1)(i)]
  - Gloves, hats, and shoes or disposable shoe coverlets; and [1910.1025(g)(1)(ii)]
  - Face shields, vented goggles, and other appropriate protective equipment. [1910.1025(g)(1)(iii)]

Figure 1
Appropriate PPE

- Clean and dry protective work clothing must be provided daily or weekly depending on exposure levels. [1910.1025(g)(2)(i)]
  - Cleaning, laundering, or disposal of protective clothing and equipment must be provided. [1910.1025(g)(2)(ii)]
  - Protective clothing and equipment must be repaired or replaced as needed to maintain its safety an effectiveness. [1910.1025(g)(2)(iii)]

Figure 2
Vacuum to remove lead from protective clothing

Safety and Health Topics Page

Oxide and Grid Processing

Plate Processing

Battery Assembly

Battery Repair and Reclaim

Environmental Controls

Maintenance

Engineering Controls

OSHA Lead Requirements...

Protective Clothing and Equipment

Housekeeping

Hygiene Facilities

Source Identification Protocol

- All protective clothing must be removed at the end of a work shift in change rooms provided for that purpose. [1910.1025(g)(2)(iv)]

- Contaminated protective clothing, which is to be cleaned, laundered, or disposed of, must be placed in a closed, labeled container in the changing area. [1910.1025(g)(2)(v)]

- Persons who clean or launder protective clothing or equipment must be informed in writing of the potentially harmful effects of exposure to lead. [1910.1025(g)(2)(vi)]

- Containers of contaminated protective clothing and equipment must be appropriately labeled. [1910.1025(g)(2)(vii)]

- Removal of lead from protective clothing or equipment by blowing, shaking, or any other means which disperses lead into the air is prohibited. [1910.1025(g)(2)(viii)] (Figure 2)

back to top

Lead Battery Manufacturing

OSHA Lead Requirements for PPE, Housekeeping, and Hygiene Facilities > Housekeeping

A rigorous housekeeping program is necessary to keep airborne lead levels as low as feasibly possible.

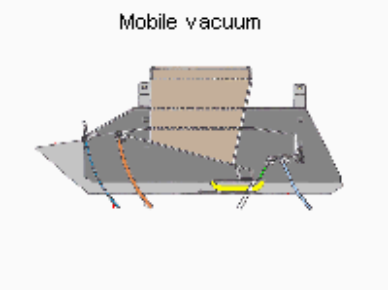

View larger image of mobile vacuum diagram

OSHA Housekeeping Requirements

- All surfaces must be maintained as free as practicable of accumulations of lead. [1910.1025(h)(1)]
- Floors and other surfaces where lead accumulates may not be cleaned by the use of compressed air. [1910.1025(h)(2)(i)]
- Shoveling, dry or wet sweeping and brushing may be used only where vacuuming or other equally effective methods have been tried and found not to be effective. [1910.1025(h)(2)(ii)] (Figure 1)
- Where vacuuming methods are selected, the vacuums shall be used and emptied in a manner which minimizes the reentry of lead into the workplace. [1910.1025(h)(3)]
  - Central Vacuum Diagram
  - Mobile Vacuum Diagram

Figure 1
Vacuum instead of sweep

Figure 2
Vacuuming lead oxide on the floor

back to top

Safety and Health Topics Page
Oxide and Grid Processing
Plate Processing
Battery Assembly
Battery Repair and Reclaim
Environmental Controls
Maintenance
Engineering Controls
OSHA Lead Requirements...
Protective Clothing and Equipment
Housekeeping
Hygiene Facilities
Source Identification Protocol

Lead Battery Manufacturing

OSHA Lead Requirements for PPE, Housekeeping, and Hygiene Facilities > Hygiene Facilities

Lunch rooms, break rooms, and control rooms in secondary smelting plants should exhibit low ambient lead levels. The following are OSHA requirements that have been established for the provision and maintenance of hygiene facilities.

- Hygiene facility diagram

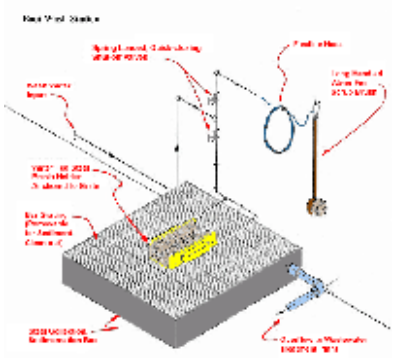

View larger view of boot wash station

Hygiene Facilities

- Food, beverage, and tobacco products must not be present or consumed, and cosmetics must not be applied, except in change rooms, lunchrooms, and showers. [1910.1025(i)(1)]

- Clean change rooms must be provided. [1910.1025(i)(2)(i)] (Figure 1)
  - Change rooms must be equipped with separate storage facilities for protective work clothing and equipment and for street clothes. [1910.1025(i)(2)(ii)]

- Employees exposed to lead above the PEL must shower at the end of the work shift. [1910.1025(i)(3)(i)]
  - Shower facilities must be provided. [1910.1025(i)(3)(ii)]
  - Employees must not leave the workplace wearing any clothing or equipment worn during the work shift. [1910.1025(i)(3)(iii)]

- Lunchroom facilities must be provided for employees. [1910.1025(i)(4)(i)] (Figure 2)
  - Lunchroom facilities must have a temperature- controlled, positive-pressure, filtered air supply.

Figure 1
Change room

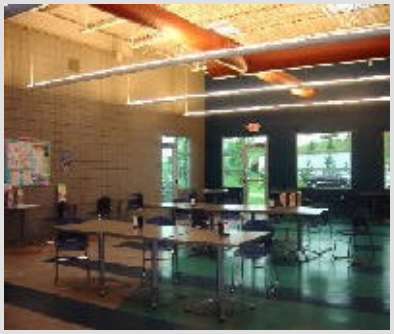

Figure 2
Lunchroom

Safety and Health Topics Page

Oxide and Grid Processing

Plate Processing

Battery Assembly

Battery Repair and Reclaim

Environmental Controls

Maintenance

Engineering Controls

OSHA Lead Requirements...

Protective Clothing and Equipment

Housekeeping

Hygiene Facilities

Source Identification Protocol

[1910.1025(i)(4)(ii)]

- Employees must wash their hands and face before eating, drinking, smoking or applying cosmetics. [1910.1025(i)(4)(iii)]
  (Figure 3)

Figure 3
Hand wash station

- Employees must not enter lunchroom facilities with protective work clothing or equipment unless surface lead dust has been removed by vacuuming, down draft booth, or other cleaning method. [1910.1025(i)(4)(iv)]
  - Clothes Cleaning Air Shower Diagram
  - Boot Wash Station Diagram
  - Shoe Cleaning Machine

Figure 4
Air shower

back to top

Figure 1: Source Characterization

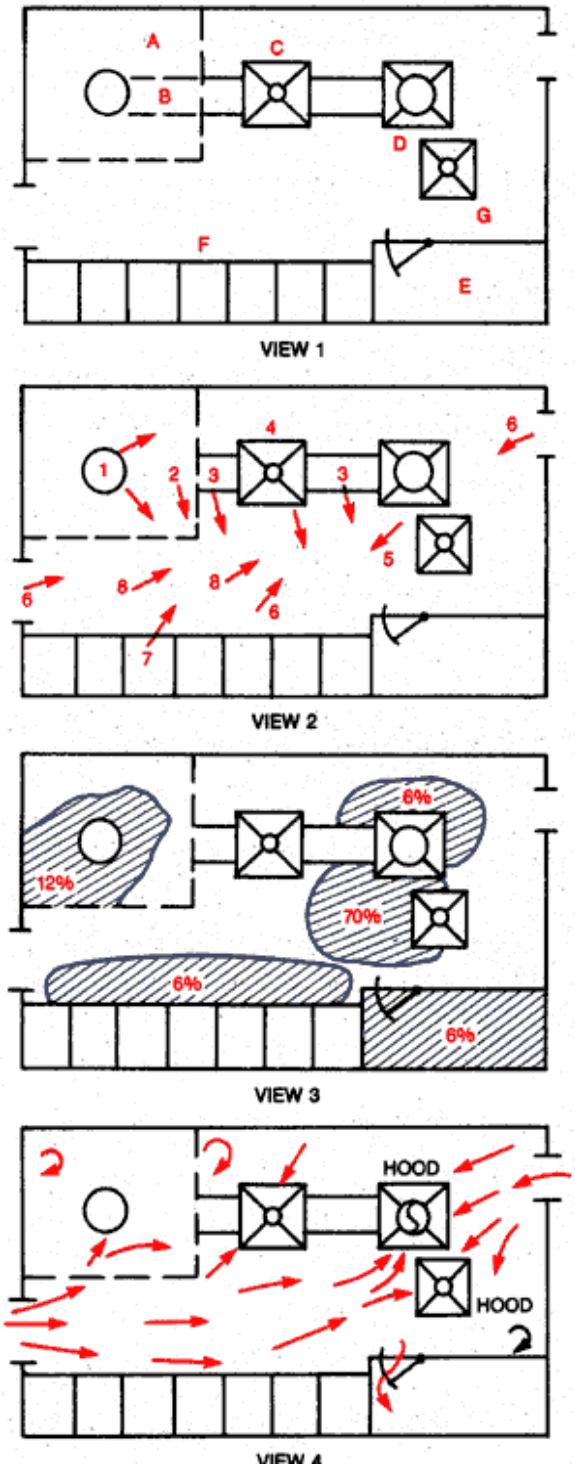

PLAN VIEW
A. OXIDE MIXING AREA
B. PASTING
C. CURING OVEN
D. STACKING AREA
E. OFFICE
F. STORAGE
G. VENTILATED RACK

EMISSION SOURCES
1. OXIDE OPERATION
2. PASTING
3. CONVEYOR
4. OVEN
5. FUGITIVES
6. RE-ENTRAINMENT/WIND
7. STORAGE AREA
8. MOBILE EQUIPMENT

EMPLOYEE WORK AREAS
% OF TIME IN AREA
FOR OFFBEARER

AIR FLOW PATTERNS

Lead Battery Manufacturing

Scope

This eTool is designed to assist the lead-acid battery manufacturing industry in identifying potential engineering and work practice controls to reduce employee lead exposure. It is the employer's responsibility to evaluate the sources of exposure and the controls necessary for their particular operation in order to reduce employee lead exposure to the lowest feasible level [1910.1025(e)(1)]. The sources of exposure can be identified through task analysis sampling or through video exposure monitoring.

The engineering and work practice controls listed in this eTool are intended as guides for design purposes and apply to typical operations in battery manufacturing plants. Many of the controls have been shown to reduce employee lead exposure and are provided to assist employers and employees in complying with the OSHA Lead Standard. Not every control presented will be applicable to all battery manufacturing plants without modifications because of special conditions such as work place constraints, cross-drafts, motion, differences in temperature, differences in process operations or use of other means of contaminant suppression. Additionally, other controls not presented in this eTool may exist, which may be applicable to a particular plant.

It is the employer's responsibility to acquire industrial hygiene and ventilation expertise to evaluate sources of employee exposure, and to design, install, operate and maintain exhaust ventilation systems according to recognized industrial hygiene practices. These practices can be found in publications such as the American Industrial Hygiene Association and the American Conference of Governmental Industrial Hygienists.

Respiratory protection and medical surveillance are not addressed in this eTool, but are required for: compliance with the Lead Standard, controlling lead exposure levels, and preventing lead-related disease. Please refer to the following for more information:

- 29 CFR 1910.1025, Lead
  - 1910.1025(f), Respiratory protection
  - 1910.1025(j), Medical surveillance
- Medical Surveillance Safety and Health Topics Page
- Respiratory Protection Safety and Health Topics Page
- Respiratory Protection eTool

Safety and Health Topics Page
Oxide and Grid Processing
Plate Processing
Battery Assembly
Battery Repair and Reclaim
Environmental Controls
Maintenance
Engineering Controls
OSHA Lead Requirements...
Source Identification Protocol

Disclaimer

eTools are "stand-alone", illustrated, Web-based training tools on occupational safety and health topics. As indicated in the disclaimer, eTools do not create new OSHA requirements.

Lead Battery Manufacturing

Safety and Health Topics Page

Oxide and Grid Processing

Plate Processing

Battery Assembly

Battery Repair and Reclaim

Environmental Controls

Maintenance

Engineering Controls

OSHA Lead Requirements...

Source Identification Protocol

Additional References

- OSHA Safety and Health Topic Pages
  - Battery Manufacturing
  - Lead
  - Toxic Metals
- Industrial Ventilation: A Manual of Recommended Practice, 24rd Edition. American Conference of Governmental Industrial Hygienists, Inc. (ACGIH) (2001), 250 pages.
- Z9.2-2001 American National Standard - Fundamentals Governing the Design and Operation of Local Exhaust Ventilation Systems. American National Standards Institute (ANSI) and American Industrial Hygiene Association (AIHA), (May 2001).
- Maintenance, examination and testing of local exhaust ventilation. Health and Safety Executive (HSE), UK (1998), 35 pages. This guidance document provides advice to employers and others who operate, service and maintain local exhaust ventilation systems.
- Industrial Ventilation, A Self-Directed Learning Workbook, 4th Edition. Burton, D. Jeff of IVE Inc. (1998), about 200 pages. This workbook is a companion study guide to the ACGIH Industrial Ventilation Manual listed above. This workbook also provides calculations, charts, forms, checklists, and auditing documents.
- The Occupational Environment - Its Evaluation and Control. American Industrial Hygiene Association (AIHA) (1997).
- Technical Manual: Ventilation Investigation. OSHA (1992), 26 pages. This manual describes the use of supply and exhaust ventilation to control emissions, exposures, and chemical hazards in the workplace.
- Dust Control Handbook for Minerals Processing, Ch 2. Preventing Dust Formation. OSHA, Bureau of Mines, and the U.S. Department of the Interior (1987, February), 20 pages. This handbook consolidates information developed by industry and government laboratories on dust control engineering techniques for metal and nonmetal mineral processing.
- Dust Control Handbook for Minerals Processing, Ch 4. Collecting and Disposing of Dust. OSHA, Bureau of Mines, and the U.S. Department of the Interior (1987, February), 29 pages. This handbook consolidates information developed by industry and government laboratories on dust collection methods for metal and nonmetal mineral processing.
- Sheet Metal and Air Conditioning Contractors National Association (SMACNA)
  - HVAC Systems Duct Design, 3rd Edition (1990)
  - Round Industrial Duct Construction Standards (1977)
  - Low Pressure Duct Construction Standards, 5th Edition (1976)
  - Accepted Industry Practice for Industrial Duct Construction (1975)
- American Society of Heating, Refrigeration, and Air-Conditioning Engineers (ASHRAE)
  - Waiting for documents

Disclaimer

eTools are "stand-alone", illustrated, Web-based training tools on occupational safety and health topics. As indicated in the disclaimer, eTools do not create new OSHA requirements.

Lead Battery Manufacturing

Safety and Health Topics Page

Oxide and Grid Processing

Plate Processing

Battery Assembly

Battery Repair and Reclaim

Environmental Controls

Maintenance

Engineering Controls

OSHA Lead Requirements...

Source Identification Protocol

Disclaimer

eTools are "stand-alone", illustrated, Web-based training tools on occupational safety and health topics. As indicated in the disclaimer, eTools do not create new OSHA requirements.

Glossary

ACGIH - American Conference of Governmental Industrial Hygienists

Action level - Exposure to a level of airborne contamination that requires an employer to implement some, but not all, of the surveillance and control activities of an OSHA standard. The action level is usually equal to one-half of the permissible exposure level. An exception is the action level for lead, which is 30 micrograms per cubic meter of air as compared to the permissible exposure limit of 50 micrograms per cubic meter of air.

ANSI - American National Standards Institute

ASHRAE - American Society of Heating, Refrigeration, and Air-Conditioning Engineers.

ASME - American Society of Mechanical Engineers

Ball Mill Process - To produce lead oxide using this method, "pigs" or bars of lead are put into a rotating mill where they are broken down by the heat and friction of grinding against each other. Oxygen in the air, assisted by the heat of the tumbling lead, reacts with the lead to produce lead oxide.

Barton-Like Process - To produce lead oxide using this method, pure lead bars are melted down, and the molten lead is agitated to form extremely small droplets of lead. The droplets are oxidized, separated by particle size, and pneumatically transported to a collection system.

Baghouse - The structure housing the bags of tubular or envelope-shaped fabric filter, used for the high-efficiency collection of solid particulate (that is, dust and fumes) from a contaminated air stream or gas stream.

Charging location - The physical opening through which raw materials are introduced into a lead pot.

Dross - A scum formed on the surface of molten metal. Dross refers to the lead oxides, copper, antimony, and other elements that float to the top of the molten lead.

Dry Charge (Open Tank) Formation - In the formation process, the first step, called tacking consists of plates being placed in a tank and lead bars being welded, or "tacked" on. Battery plates are then formed (or charged) in tanks. Once the plates are removed they are dried. Positive plates are dried in re-circulating, hot-air ovens while the negative plates are placed in special ovens to avoid oxidizing and discharging.

Enclosure hood - A hood that covers a process fugitive emission source on the top and on all sides, with openings only for access to introduce or remove materials to or from the source and through which an induced flow of air is ventilated.

Enveloping and Wrapping - Enveloping consists of placing a plate (usually positive) within a porous membrane. The membrane is folded over the bottom of the plate and sealed by pressure, heat, or ultrasonic means on two sides, usually by an automatic machine. Industrial battery plates can also be hand-wrapped.

Fugitive Dust Source - A stationary source of hazardous air pollutant emissions at a battery manufacturing plant resulting from the handling, storage, transfer, or other management of lead-bearing materials where the source is not

associated with a specific process or process fugitive vent or stack. Fugitive dust sources include, but are not limited to, roadways, dried paste, handling oxide, and paste mixing.

Grid Casting - Pigs of lead are melted down and the molten lead is poured into grid molds. The grids are then cooled, trimmed, inspected, and stacked.

Group Burning - After the positive and negative plates and separator material have been stacked they are joined with small connecting parts and burned together to form cell elements or groups. This operation is conducted either manually at a burning station or by using an automatic cast-on-strap (COS) machine. The burning station is a fixture that holds the plates in the elements while the positive and negative plates are joined. Small parts, which will become intercell connectors or posts, are placed in the fixture, then bonded by melting lead bars with a hand-held torch.

Hydrosetting - Hydrosetting is the reaction between free lead particles in plates and sulfuric acid. It normally takes place over a period of 48 to 72 hours. Hydrosetting methods vary between battery plants, ranging from placing the pasted plates on racks or pallets in the workroom to placing the racks within a temperature- and humidity-controlled room or chamber.

Intercell Welding and Post Burning - After the groups have been placed in the battery case, the straps are fused together using a torch or high electrical power source. The units are then tested and the posts are attached. Post or terminal burning involves using lead, a torch, and a mold. Lead is either dipped from a molten bath or is applied by melting lead bars into a mold cavity. The mold cavity is created by using a metal cover plate, called a burning dam, which is placed on the top of the battery prior to torching. This process can also be done with through the partition (TTP) using a case that has been punched and then the connections are welded.

Parts Casting - Small parts, including battery terminal posts, straps, connectors, and lead burning bars, are cast in a manner similar to grids. See Grid Casting for more information.

Paste Mixing - During the paste-mixing process, lead oxide and water are blended in a mixer to form a thick paste. Diluted sulfuric acid is then added to form lead sulfate, supplying a necessary binding cement so that the pasted plate can be handled without the loss of significant amounts of material.

Pasting - During the pasting process, lead oxide paste is applied to the grid panels in a pasting machine to fill the spaces of the grid. The plates are then rolled and flash dried. Workers remove the partially dried plates from the conveyer and place them on pallets or in racks.

Parting - Grids are commonly produced and pasted as pairs called pasted plates or panels. They must then be separated before the battery can be built. This plate breaking or parting may be performed manually, by saw, or by a parting machine. It can occur after flash drying, after curing but before plate burning, or, in the case of dry-charge battery manufacture, following the plate formation process (forming, washing, and drying).

SMACNA - Sheet Metal and Air Conditioning Contractors National Association.

Stacking - After curing, the plates are stacked either by hand or machine so that positive and negative plates alternate with an insulating separator in between. If an enveloper is used, no separator is required at stacking. Teams of workers often hand stack and group burn at the same station. In other plants, the stations are separate.

TWA - Time-weighted average.

Wet (Case) Formation - The assembled battery is filled with acid and charged.

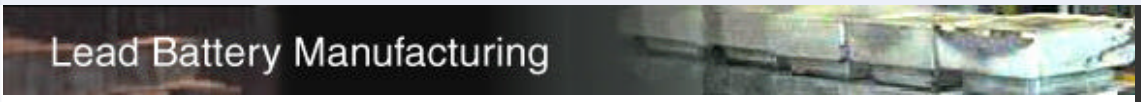

Safety and Health Topics Page

Oxide and Grid Processing

Plate Processing

Battery Assembly

Battery Repair and Reclaim

Environmental Controls

Maintenance

Engineering Controls

OSHA Lead Requirements...

Source Identification Protocol

Credits

Thanks to Our Contributors

Technical Editorial Board

- Editor: Edward Zimowski, OSHA Directorate of Science, Technology, and Medicine; Salt Lake City, UT
- Bob Curtis, OSHA Directorate of Science, Technology, and Medicine; Salt Lake City, UT
- Mel Cassady, Cassady Safety and Health Services, Inc.; Philadelphia, PA
- Don Erskine, Enersis; Reading, PA
- Ned Fergusen, Battery Council International
- Glen Lamson, OSHA Directorate of Science, Technology, and Medicine; Salt Lake City, UT
- Maureen O'Donnell, OSHA Directorate of Enforcement Programs; Washington D.C.
- Terry Oxenrider, Enersis; Reading, PA
- Todd Regula, Enersis; Reading, PA
- Randy Reyer, Enersis, Reading, PA

Support Personnel

- Content Development: Leighton Hill, M.S.; Salt Lake City, UT
- Technical Writing: Alyson Brooks; Salt Lake City, UT
- HTML Support:
  - Kym Pond, Now That's Creative!, Salt Lake City, UT
- Design Layout:
  - Paul Amundsen, Amundsen Images; Salt Lake City, UT
  - Christie Stewart, DishWater Design; Salt Lake City, UT

Special Thanks

- **Enersis; Reading, PA.** Provided review and photos

Disclaimer

eTools are "stand-alone", illustrated, Web-based training tools on occupational safety and health topics. As indicated in the disclaimer, eTools do not create new OSHA requirements.

This eTool is not a new standard or regulation, and creates no new legal obligations. The eTool is advisory in nature, informational in content, and is intended to assist employers in providing a safe and healthful workplace through effective prevention programs adapted to the needs of each place of employment.

The Occupational Safety and Health Act requires employers to comply with hazard-specific safety and health standards. In addition, employers must provide their employees with a workplace free from recognized hazards likely to cause death or serious physical harm under Section 5(a)(1), the General Duty Clause of the Act. Employers can be cited for violating the General Duty Clause if there is a recognized hazard and they do not take steps to prevent or abate the hazard. However, failure to implement these guidelines is not, in itself, a violation of the General Duty Clause. Citations can only be based on standards, regulations, and the General Duty Clause.

The Department of Labor maintains this Web site to enhance public access to the Department's information. This is a service that is continually under development. We will make every effort to keep this site current and to correct errors brought to our attention.

The documents on this site contain hypertext pointers to information created and maintained by other public and private organizations. Please be aware that we do not control or guarantee the accuracy, relevance, timeliness, or completeness of this outside information. Further, the inclusion of pointers to particular items in hypertext is not intended to reflect their importance, nor is it intended to endorse any views expressed or products or services offered by the author of the reference or the organization operating the site on which the reference is maintained.

Translations of any materials into language other than English is intended solely as a convenience to the non-English-reading public. We have attempted to provide an accurate translation of the original material in English, but due to the difficulties of translation slight differences may exist. References identifying the original document in English are available in most non-English documents.

Close this Window